Supplementary Information

The following information is associated with Network Rail Standard:
**NR CIV/SD/2173-1** Rev B

## Additional Content Access

Click the link below to access CAD version of this drawing.

### CAD Drawing

- CIV/SD/2173-1

If you have any questions, or need assistance, please contact **IHS Support**

Information accessed via the links above is the property of the Copyright holder

**IHS Additional Content Page**

Documents
Document Sharing Hub

Copyright Network Rail
Provided by IHS under license with Network Rail
No reproduction or networking permitted without license from IHS
Full document details: NR NR-CIV-SD-2173-1 ISSUE B 2012

Licensee=Weston Williamson/5989497001, User=sam, albett
Not for Resale, 03/27/2016 19:56:22 MDT

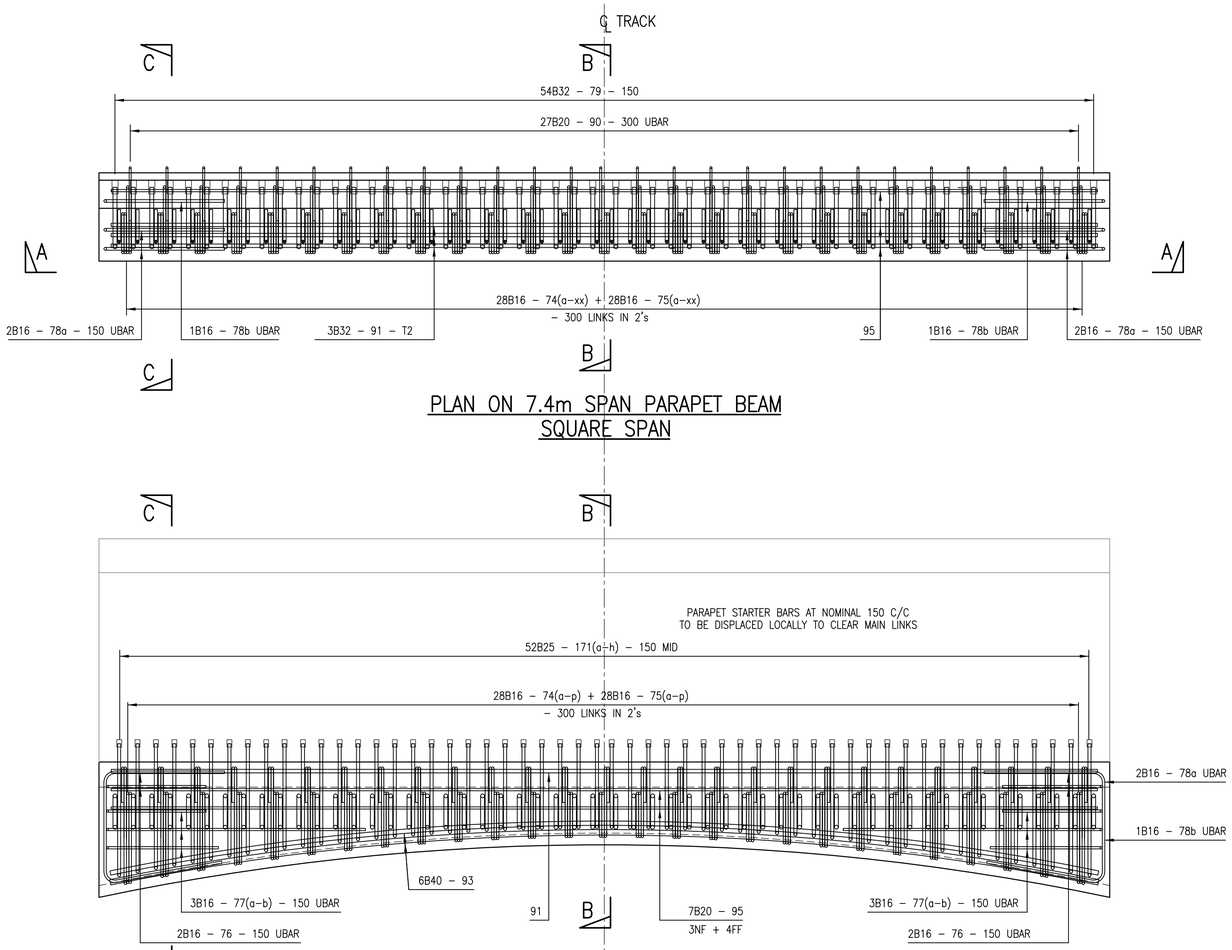


PLAN ON 7.4m SPAN PARAPET BEAM
SQUARE SPAN




ELEVATION A–A
HORIZONTAL MASONRY PARAPET

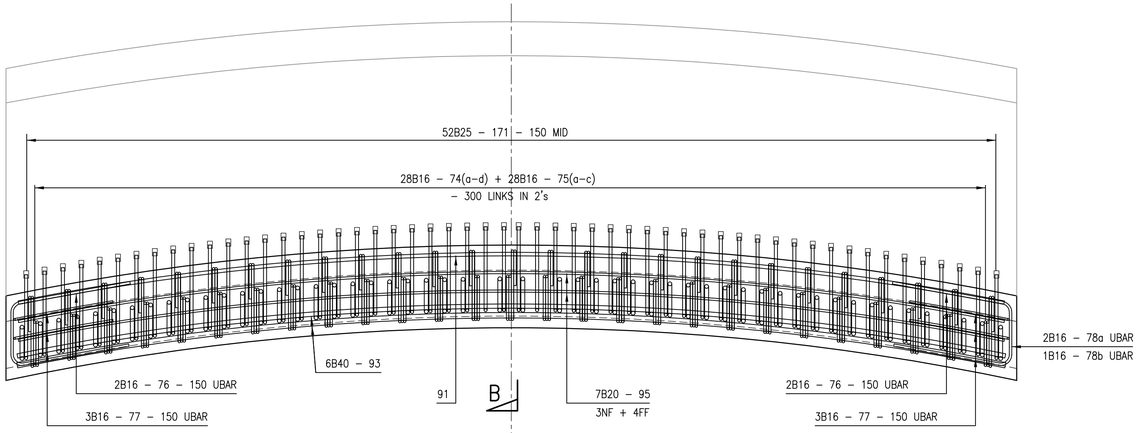


ELEVATION A–A
CURVED MASONRY PARAPET

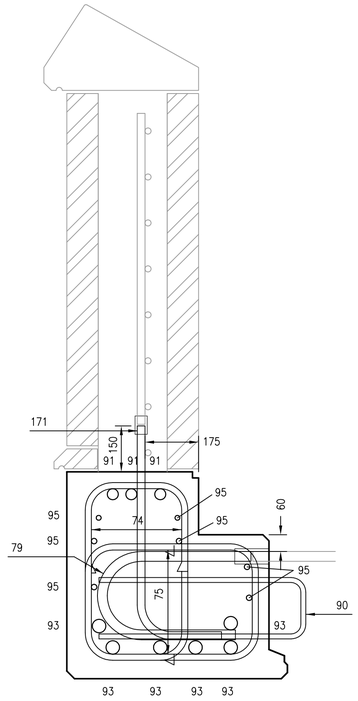


SECTION B–B
SCALE 1:10

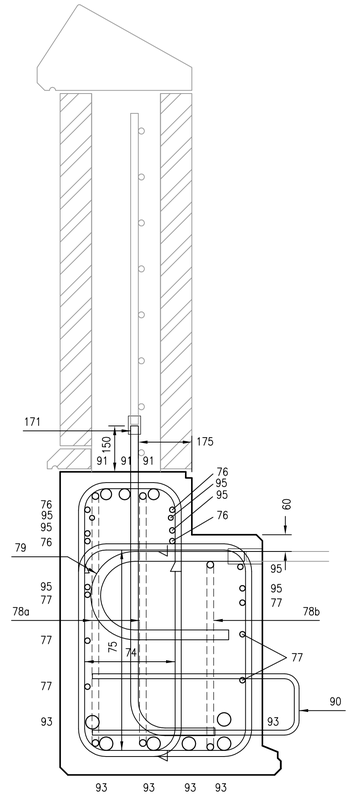


SECTION C–C
SCALE 1:10

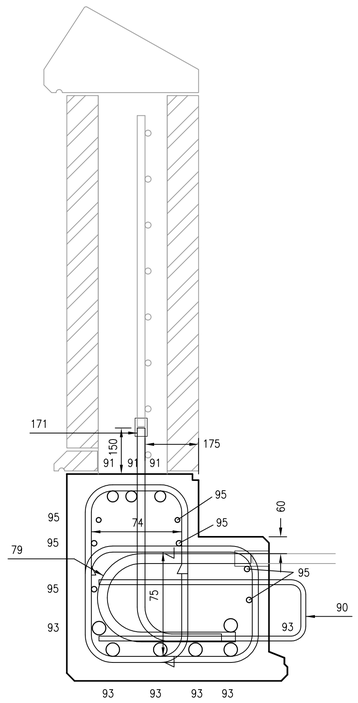


SECTION D–D
SCALE 1:10

| | | | | |
|---|---|---|---|---|
| | | | | |
| B | 27.04.12 | SECOND ISSUE | SzT | SWF |
| A | 12.10.10 | FIRST ISSUE | SzT | SWF |
| Rev | Date | Description of revision | Designed | C'kd |

Network Rail

Network Rail Infrastructure Ltd. Registered Office:
Kings Place, 90 York Way, London, N1 9AG

| | | | | |
|---|---|---|---|---|
| Approved | P. Clark | Head of Engineering IP Central | PC | Apr 2013 |
| | | | | |
| | Name | Position | Signature | Date |

Master copy with original signatures held by Network Rail HQ
CIVIL ENGINEERING STANDARD DESIGN

© COPYRIGHT NETWORK RAIL 2013

STANDARD CONARCH
OVERBRIDGE

REINFORCEMENT DETAILS
7.4m MASONRY PARAPET BEAM
SQUARE SPAN

SHEET 1

| | |
|---|---|
| Scale | 1:25 |
| Drawing Number | NR/CIV/SD/2173–1 B |

DRAWING No. NR/CIV/SD/2173–1

NOTES

1. FOR GENERAL NOTES REFER TO DRAWING No. NR/CIV/SD/2001.

Full document details: NR NR-CIV-SD-2173-1 ISSUE B 2012
AVA Documents
Document Sharing Hub
Copyright Network Rail
Provided by IHS under licence with Network Rail
Reproduced by permission of Network Rail
Licence reference: WAN-0000595 Issued: 2013-04-15
Licensee reference: 1000000000 User name: alisjo