Supplementary Information

The following information is associated with Network Rail Standard:
NR CIV/SD/2201-1 Rev B

Additional Content Access

Click the link below to access CAD version of this drawing.

CAD Drawing

- CIV/SD/2201-1

If you have any questions, or need assistance, please contact **IHS Support**

Information accessed via the links above is the property of the Copyright holder

IHS Additional Content Page

Documents
Document Sharing Hub

Copyright Network Rail
Provided by IHS under license with Network Rail
No reproduction or networking permitted without license from IHS
Full document details: NR NR-CIV-SD-2201-1 ISSUE B 2012

Licensee=Weston Williamson/5989497001, User=sam, albett
Not for Resale, 03/27/2016 19:51:30 MDT

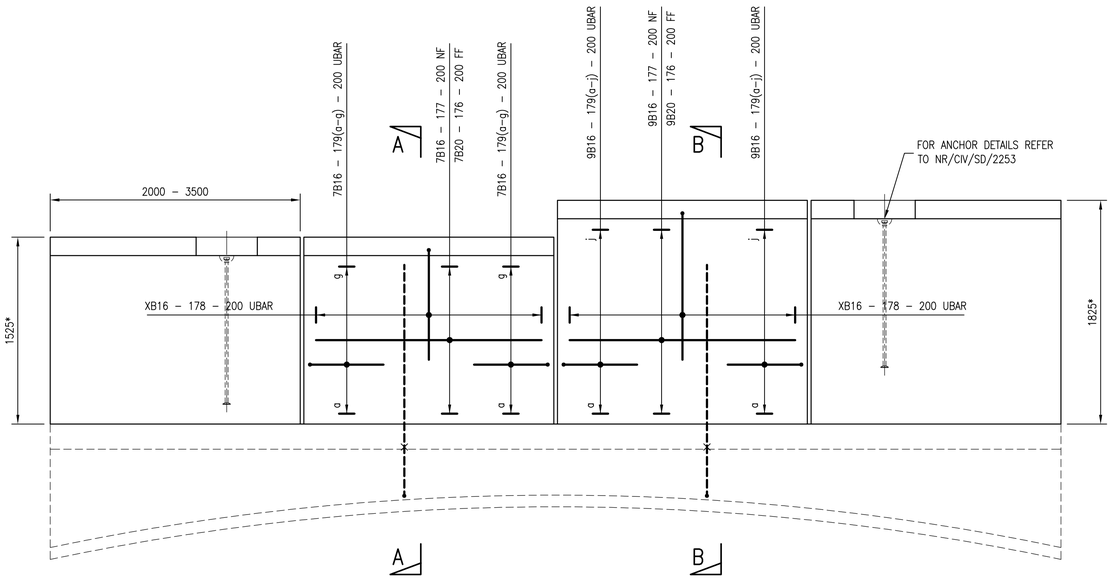

1525 HIGH PANEL HORIZONTAL PARAPET

1825 HIGH PANEL HORIZONTAL PARAPET

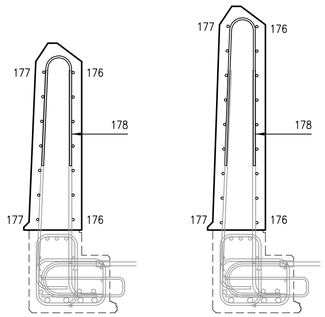

SECTION A–A

SCALE 1:25

SECTION B–B

SCALE 1:25

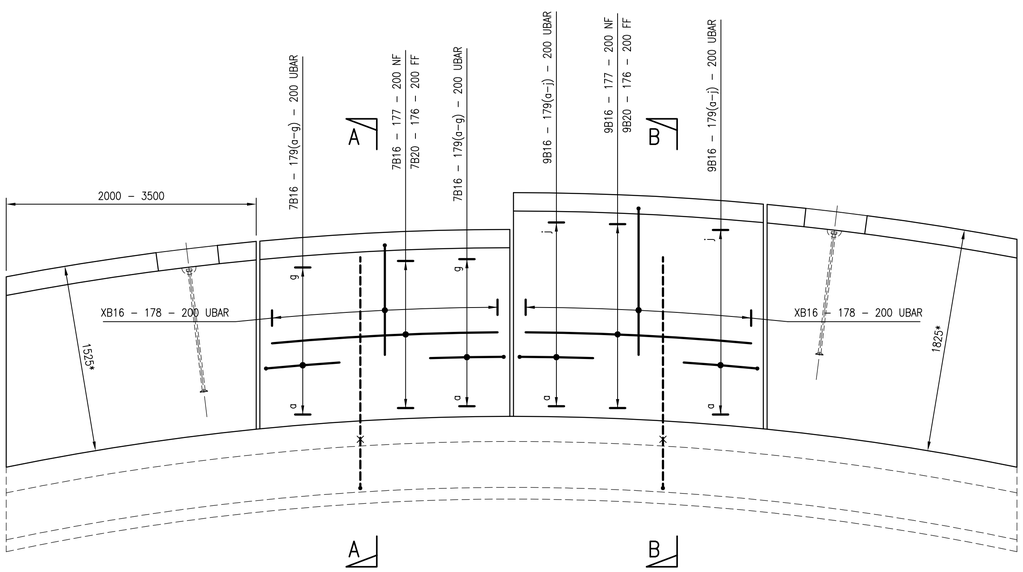

1525 HIGH PANEL CURVED PARAPET

1825 HIGH PANEL CURVED PARAPET

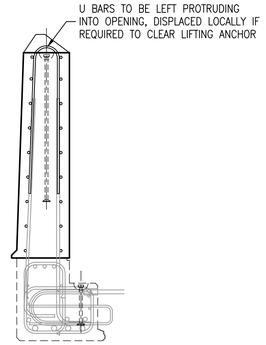

DETAIL OF LIFTING ANCHOR

SCALE 1:25

DRAWING No. NR/CIV/SD/2201–1

NOTES

1. FOR GENERAL NOTES REFER TO DRAWING No. NR/CIV/SD/2001.

Rev	Date	Description of revision	Designed	C'kd
B	27.04.12	SECOND ISSUE	SzT	SWF
A	12.10.10	FIRST ISSUE	SzT	SWF

Network Rail

Network Rail Infrastructure Ltd. Registered Office: Kings Place, 90 York Way, London, N1 9AG

Approved	P. Clark	Head of Engineering IP Central	PC	Apr 2013
	Name	Position	Signature	Date

Master copy with original signatures held by Network Rail HQ CIVIL ENGINEERING STANDARD DESIGN

© COPYRIGHT NETWORK RAIL 2013

STANDARD CONARCH OVERBRIDGE

REINFORCEMENT DETAILS CONCRETE PARAPETS

SHEET 1

Scale	1:25
Drawing Number	NR/CIV/SD/2201–1 B

Full document details: NR NR-CIV-SD-2201-1 ISSUE B 2012

AVA Documents Document Sharing Hub

Copyright Network Rail
Reproduced by HIS under licence with Network Rail
Licence number 0000000000 Licence type Internal
Licensee Mapon Wilkinson 0000000000, User-Mark, Mark