Supplementary Information

The following information is associated with Network Rail Standard:
NR CIV/SD/2223 Rev B

Additional Content Access

Click the link below to access CAD version of this drawing.

CAD Drawing

- CIV/SD/2223

If you have any questions, or need assistance, please contact **IHS Support**

Information accessed via the links above is the property of the Copyright holder

IHS Additional Content Page

Documents
Document Sharing Hub

Copyright Network Rail
Provided by IHS under license with Network Rail
No reproduction or networking permitted without license from IHS
Full document details: NR NR-CIV-SD-2223 ISSUE B 2012

Licensee=Weston Williamson/5989497001, User=sam, albett
Not for Resale, 03/27/2016 19:56:19 MDT

Full document details: NR NR-CIV-SD-2223 ISSUE B 2012

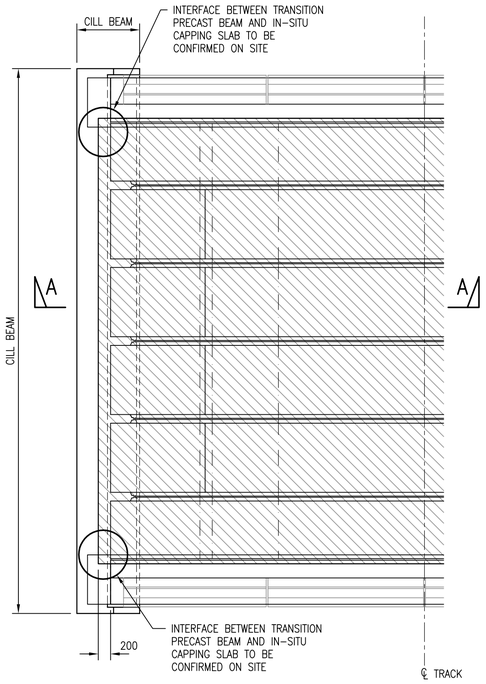

PLAN ON 9.4m BRIDGE UNITS
SQUARE PLAN
SCALE 1:50

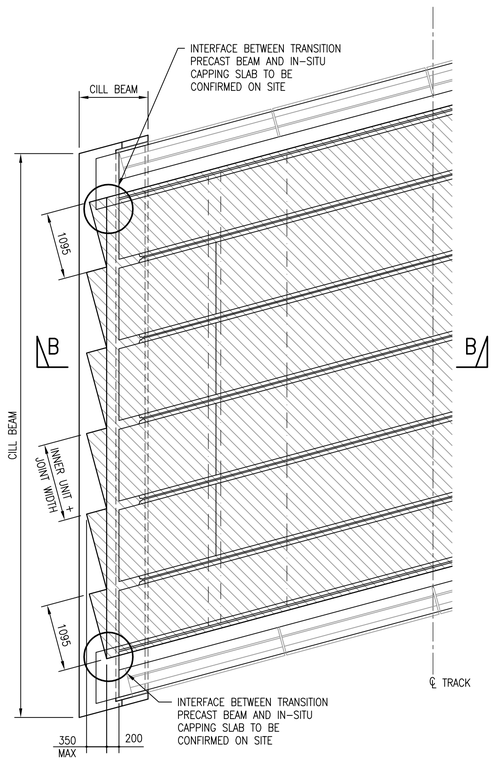

PLAN ON 9.4m BRIDGE UNITS
LEFT SKEW 15°
SCALE 1:50

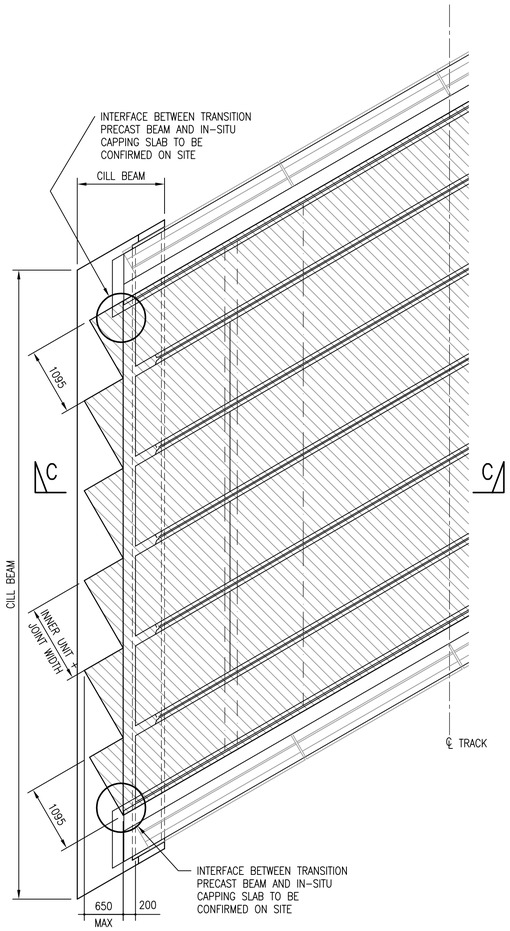

PLAN ON 9.4m BRIDGE UNITS
LEFT SKEW 30°
SCALE 1:50

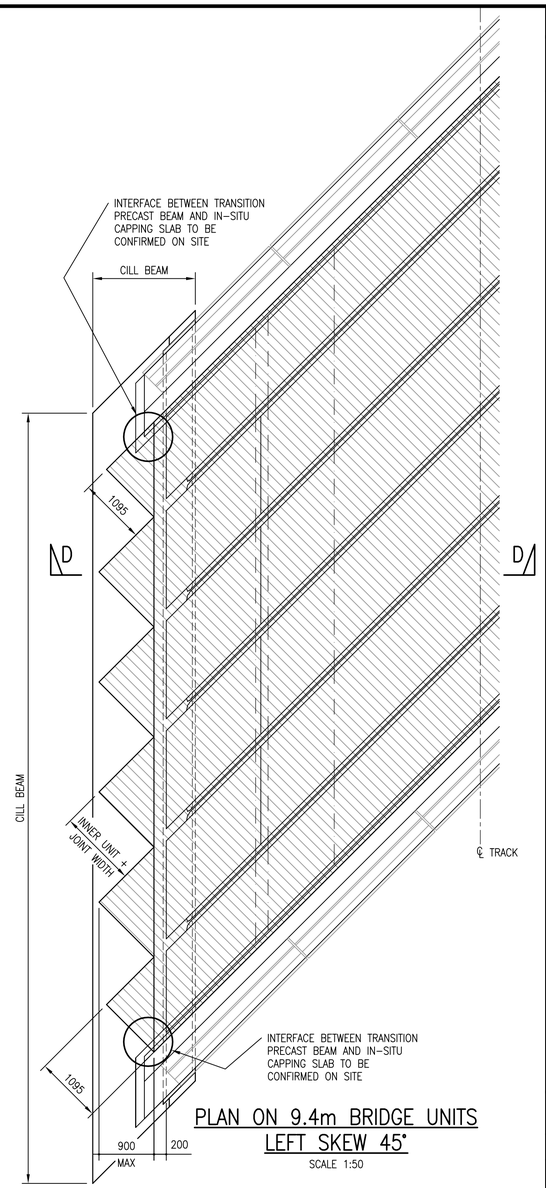

PLAN ON 9.4m BRIDGE UNITS
LEFT SKEW 45°
SCALE 1:50

LEFT SKEW UNITS SHOWN
RIGHT SKEW UNITS SIMILAR BUT
HANDED ABOUT TRACK CENTRELINE

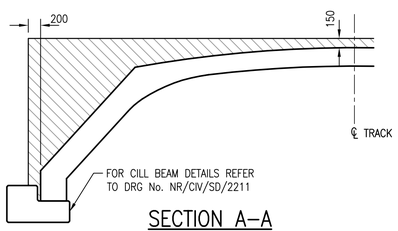

SECTION A–A
HORIZONTAL CAPPING SLAB
SCALE 1:50

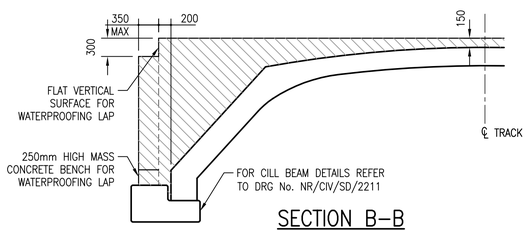

SECTION B–B
HORIZONTAL CAPPING SLAB
SCALE 1:50

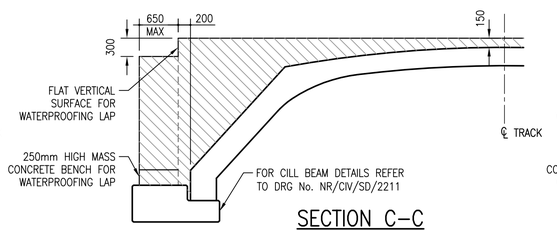

SECTION C–C
HORIZONTAL CAPPING SLAB
SCALE 1:50

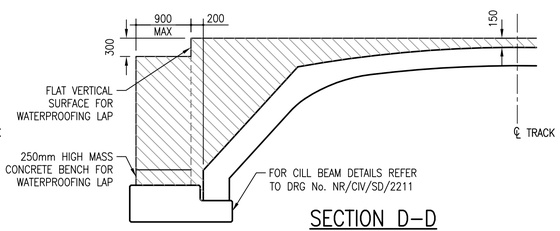

SECTION D–D
HORIZONTAL CAPPING SLAB
SCALE 1:50

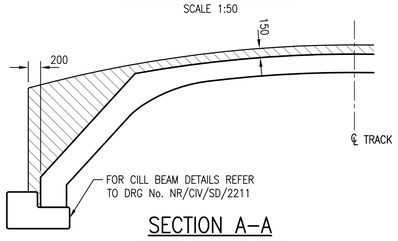

SECTION A–A
CURVED CAPPING SLAB
SCALE 1:50

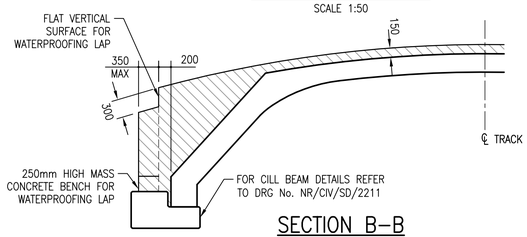

SECTION B–B
CURVED CAPPING SLAB
SCALE 1:50

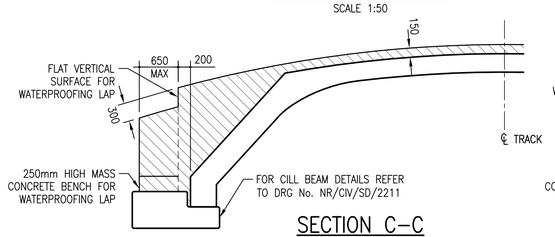

SECTION C–C
CURVED CAPPING SLAB
SCALE 1:50

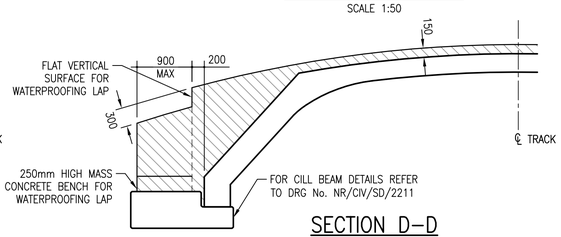

SECTION D–D
CURVED CAPPING SLAB
SCALE 1:50

DRAWING No. NR/CIV/SD/2223

NOTES

1. FOR GENERAL NOTES REFER TO DRAWING No. NR/CIV/SD/2001.

NOTE
ANY SPAN BETWEEN:
7.4m AND 9.4m, INCREMENT OF 5mm.
ANY SKEW BETWEEN:
0deg AND 45deg, LEFT OR RIGHT.
ANY CLEARANCE BETWEEN PARAPETS:
BETWEEN 4.5m AND 12.5m.
ANY INTERNAL UNIT WIDTH BETWEEN:
900mm AND 1250mm, INCREMENT OF 5mm.

Rev	Date	Description of revision	Designed	C'kd
B	27.04.12	SECOND ISSUE	SzT	SWF
A	12.10.10	FIRST ISSUE	SzT	SWF

Network Rail

Network Rail Infrastructure Ltd. Registered Office: Kings Place, 90 York Way, London, N1 9AG

Approved	P. Clark	Head of Engineering IP Central	PC	Apr 2013
	Name	Position	Signature	Date

Master copy with original signatures held by Network Rail HQ CIVIL ENGINEERING STANDARD DESIGN

© COPYRIGHT NETWORK RAIL 2013

STANDARD CONARCH OVERBRIDGE

GENERAL ARRANGEMENT CAPPING SLAB & INFILL CONCRETE FOR 9.4m SPAN

Scale	AS SHOWN	
Drawing Number	NR/CIV/SD/2223	B

Documents
Document Sharing Hub
Copyright Network Rail
Provided by NR under licence with Network Rail
Downloaded on 2013-04-11 11:11:11 by Network Rail Licence User, User-user, after
Licence-Version-Version-99999-0000