Supplementary Information

The following information is associated with Network Rail Standard:
NR CIV/SD/2241 Rev B

Additional Content Access

Click the link below to access CAD version of this drawing.

CAD Drawing

- CIV/SD/2241

If you have any questions, or need assistance, please contact **IHS Support**

Information accessed via the links above is the property of the Copyright holder

IHS Additional Content Page

--`,,,,,,`,,,,,,`,,`,,,,,,,,`-`-`,,`,,`,`,,`---

Documents
Document Sharing Hub

Copyright Network Rail
Provided by IHS under license with Network Rail
No reproduction or networking permitted without license from IHS
Full document details: NR NR-CIV-SD-2241 ISSUE B 2012

Licensee=Weston Williamson/5989497001, User=sam, albett
Not for Resale, 03/27/2016 19:52:04 MDT

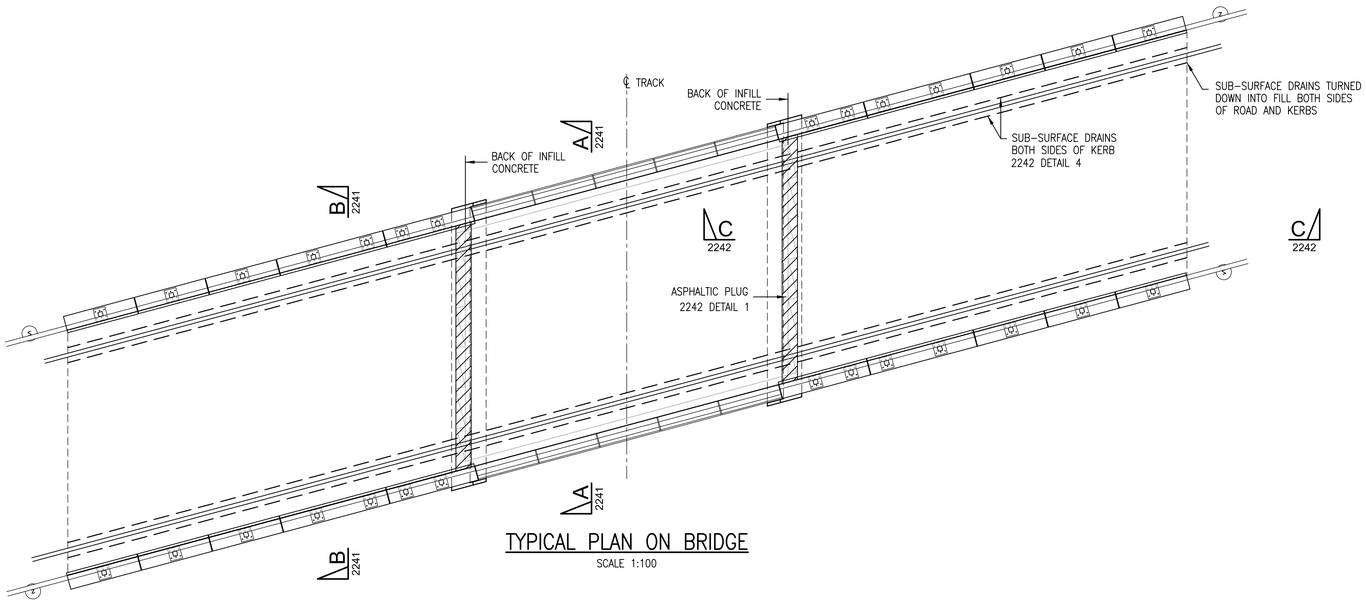

TYPICAL PLAN ON BRIDGE

SCALE 1:100

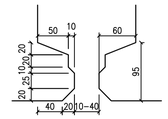

DETAIL C

SCALE 1:5

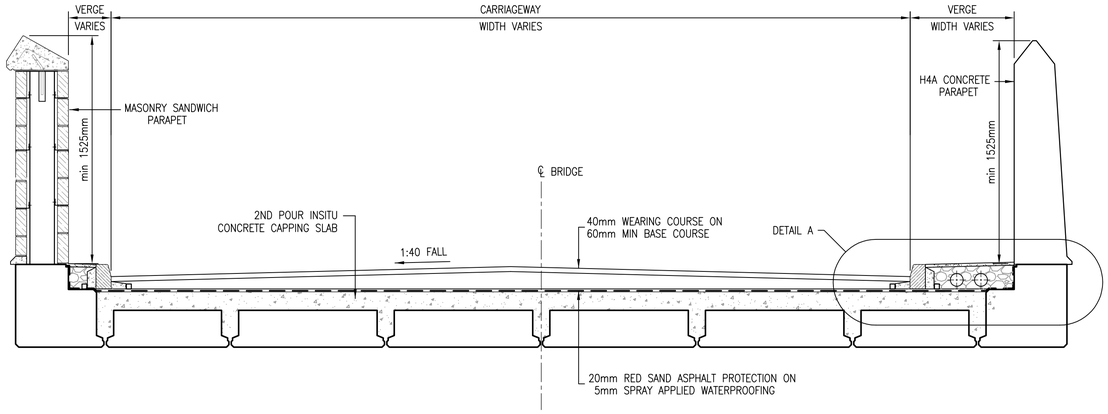

SECTION A–A

SCALE 1:25

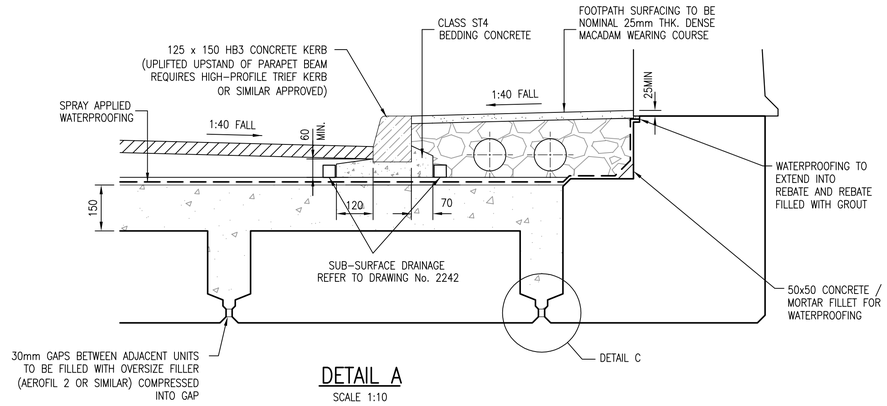

DETAIL A

SCALE 1:10

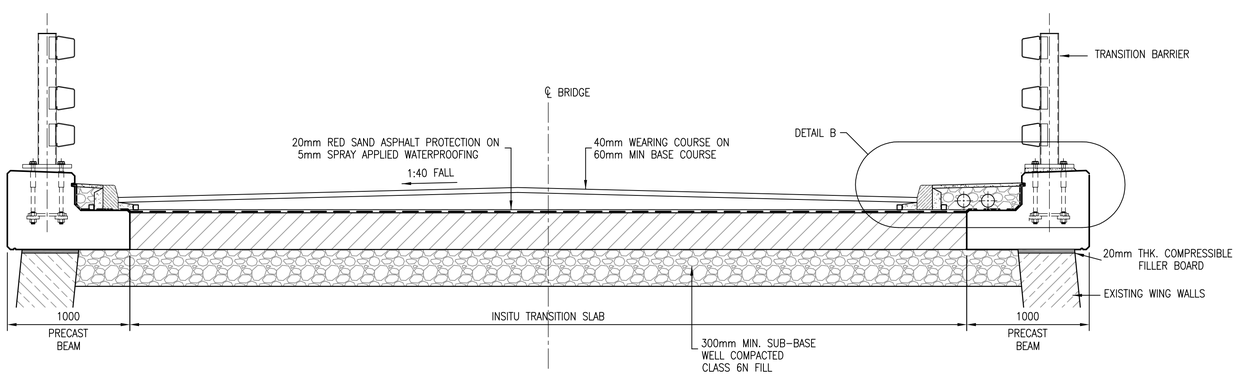

SECTION B–B

SCALE 1:25

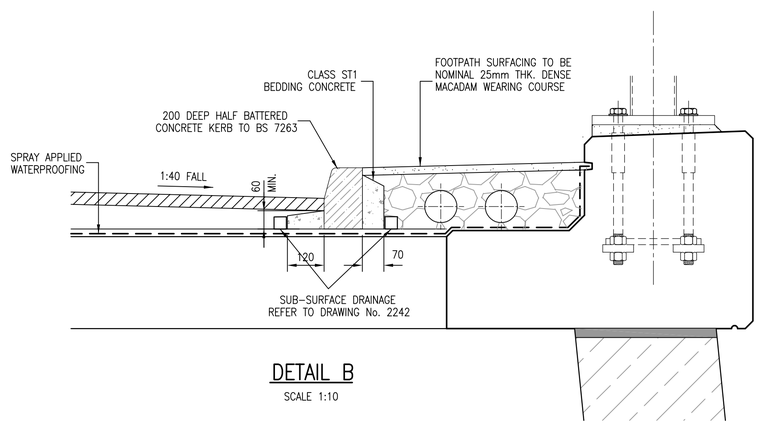

DETAIL B

SCALE 1:10

DRAWING No. NR/CIV/SD/2241

NOTES

1. FOR GENERAL NOTES REFER TO DRAWING No. NR/CIV/SD/2001.

Rev	Date	Description of revision	Designed	C'kd
B	27.04.12	SECOND ISSUE	SzT	SWF
A	12.10.10	FIRST ISSUE	SzT	SWF

Network Rail

Network Rail Infrastructure Ltd. Registered Office: Kings Place, 90 York Way, London, N1 9AG

Approved	P. Clark	Head of Engineering IP Central	PC	Apr 2013
	Name	Position	Signature	Date

Master copy with original signatures held by Network Rail HQ CIVIL ENGINEERING STANDARD DESIGN

© COPYRIGHT NETWORK RAIL 2013

STANDARD CONARCH OVERBRIDGE

GENERAL ARRANGEMENT ROAD SURFACING AND WATERPROOFING DETAILS

SHEET 1

Scale	AS SHOWN	
Drawing Number	NR/CIV/SD/2241	B

Full document details: NR NR-CIV-SD-2241ISSUE B 2012
Documents Document Sharing Hub
Copyright Network Rail
Provided by IHS under licence with Network Rail
No reproduction or distribution permitted without prior written licence from IHS
Licensee=Atkins Willbros/5935612/01, User=sam, sam
2013-04-22 08:00:00 GMT