Supplementary Information

The following information is associated with Network Rail Standard:
NR CIV/SD/2251 Rev B

Additional Content Access

Click the link below to access CAD version of this drawing.

CAD Drawing

- CIV/SD/2251

If you have any questions, or need assistance, please contact **IHS Support**

Information accessed via the links above is the property of the Copyright holder

IHS Additional Content Page

Documents
Document Sharing Hub

Copyright Network Rail
Provided by IHS under license with Network Rail
No reproduction or networking permitted without license from IHS
Full document details: NR NR-CIV-SD-2251 ISSUE B 2012

Licensee=Weston Williamson/5989497001, User=sam, albett
Not for Resale, 03/27/2016 19:52:55 MDT

Full document details: NR NR-CIV-SD-2251ISSUE B 2012

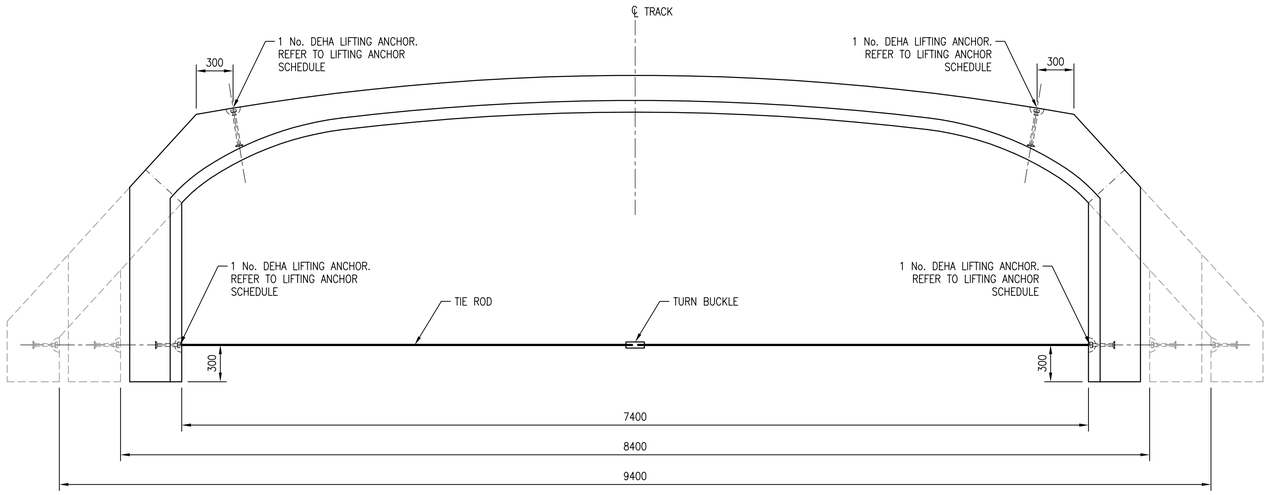

ELEVATION OF INTERNAL UNITS

SCALE 1:25

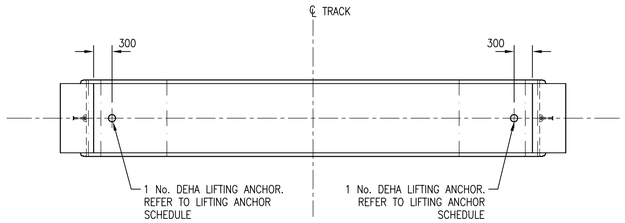

PLAN OF INTERNAL UNIT SQUARE PLAN

SCALE 1:50

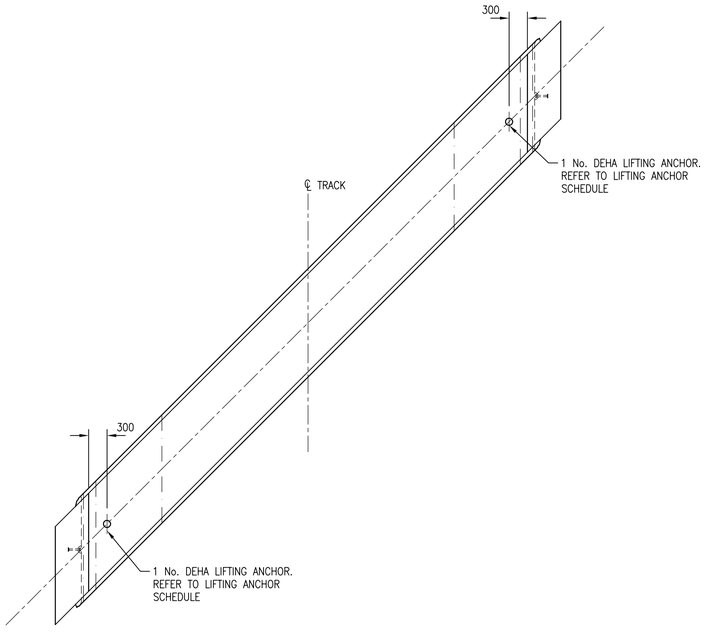

PLAN OF INTERNAL UNIT LEFT SKEW 45°

SCALE 1:50

DEHA ANCHOR SCHEDULE

LIFTING

SKEW (°) \ SPAN (m)	7.4 ⩽ 8.4	8.4 ⩽ 9.4
0 ⩽ 15	20–340	20–340
15 ⩽ 30	20–340	32–320
30 ⩽ 45	32–320	32–320

HORIZONTAL TIES

SKEW (°) \ SPAN (m)	7.4 ⩽ 8.4	8.4 ⩽ 9.4
0 ⩽ 15	7.5–200	10–250
15 ⩽ 30	10–300	15–300
30 ⩽ 45	15–300	20–340

TIE BAR CAPACITY (kN)

SKEW (°) \ SPAN (m)	7.4	8.4	9.4
0 ⩽ 15	46	62	82
15 ⩽ 30	57	77	102
30 ⩽ 45	86	117	153

DRAWING No. NR/CIV/SD/2251

NOTES

1. FOR GENERAL NOTES REFER TO DRAWING No. NR/CIV/SD/2001.
2. LIFTING ANCHORS TO BE DEHA ANCHORS OR SIMILAR APPROVED.

NOTE
ANY SPAN BETWEEN:
7.4m AND 9.4m, INCREMENT OF 5mm.
ANY SKEW BETWEEN:
0deg AND 45deg, LEFT OR RIGHT.
ANY INTERNAL UNIT WIDTH BETWEEN:
900mm AND 1250mm, INCREMENT OF 5mm.

Rev	Date	Description of revision	Designed	C'kd
B	27.04.12	SECOND ISSUE	SzT	SWF
A	12.10.10	FIRST ISSUE	SzT	SWF

Network Rail

Network Rail Infrastructure Ltd. Registered Office:
Kings Place, 90 York Way, London, N1 9AG

	Name	Position	Signature	Date
Approved	P. Clark	Head of Engineering IP Central	PC	Apr 2013

Master copy with original signatures held by Network Rail HQ
CIVIL ENGINEERING STANDARD DESIGN

© COPYRIGHT NETWORK RAIL 2013

STANDARD CONARCH OVERBRIDGE

GENERAL ARRANGEMENT INTERNAL UNIT LIFTING DETAILS

Scale: AS SHOWN

Drawing Number: NR/CIV/SD/2251 B

Copyright Network Rail
Provided by IHS under licence with Network Rail
No reproduction or networking permitted without licence from IHS
Licensee=Mott MacDonald Group Limited/5956001001, User=sam, allan
Not for resale
AVA Documents
Document Sharing Hub