Supplementary Information

The following information is associated with Network Rail Standard:
NR CIV/SD/2252 Rev B

Additional Content Access

Click the link below to access CAD version of this drawing.

CAD Drawing

- CIV/SD/2252

If you have any questions, or need assistance, please contact **IHS Support**

Information accessed via the links above is the property of the Copyright holder

IHS Additional Content Page

Documents
Document Sharing Hub

Copyright Network Rail
Provided by IHS under license with Network Rail
No reproduction or networking permitted without license from IHS
Full document details: NR NR-CIV-SD-2252 ISSUE B 2012

Licensee=Weston Williamson/5989497001, User=sam, albett
Not for Resale, 03/27/2016 19:53:02 MDT

Full document details: NR NR-CIV-SD-2252 ISSUE B 2012

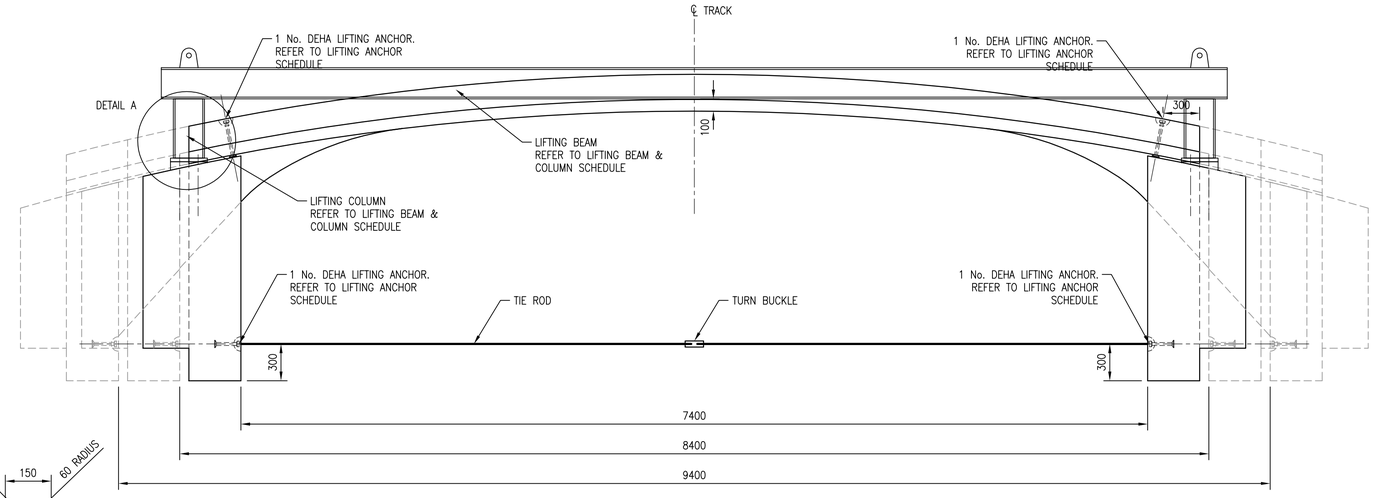

ELEVATION OF EXTERNAL UNITS

SCALE 1:25

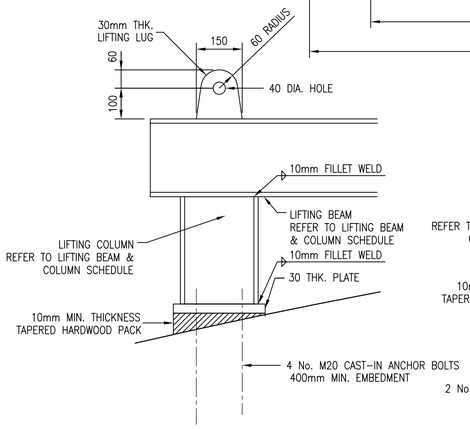

DETAIL A – LIFTING FRAME

SCALE 1:10

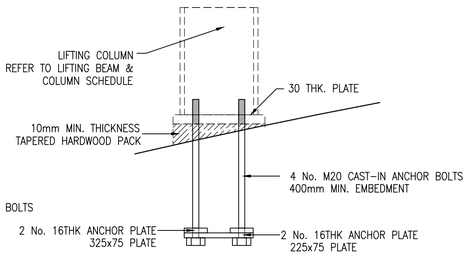

DETAIL A – ANCHOR BOLTS

SCALE 1:10

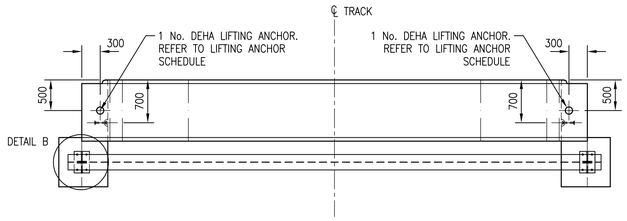

PLAN OF EXTERNAL UNIT SQUARE PLAN

SCALE 1:50

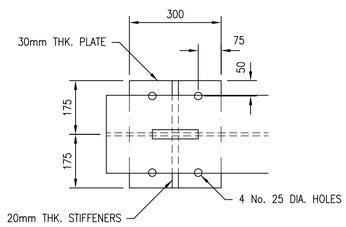

DETAIL B – BASE PLATE

SCALE 1:10

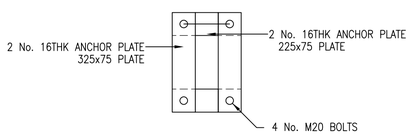

DETAIL B – ANCHOR BOLTS

SCALE 1:10

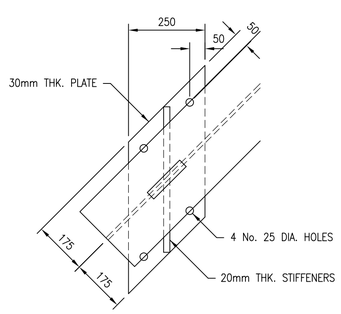

DETAIL C – BASE PLATE

SCALE 1:10

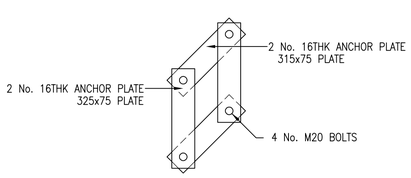

DETAIL C – ANCHOR BOLTS

SCALE 1:10

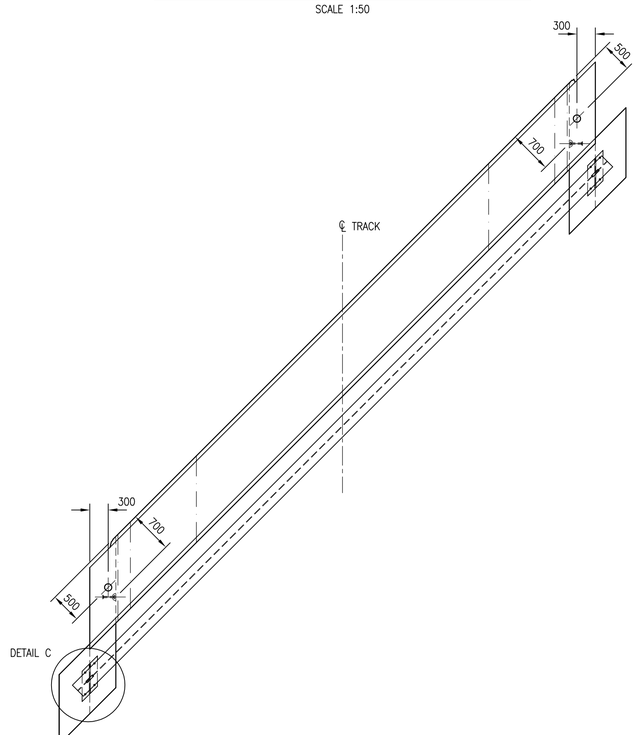

PLAN OF EXTERNAL UNIT LEFT SKEW 45°

SCALE 1:50

DEHA ANCHOR SCHEDULE

LIFTING

SKEW (°) \ SPAN (m)	7.4 ⩽ 8.4	8.4 ⩽ 9.4
0 ⩽ 15	20–500	20–500
15 ⩽ 30	20–500	20–500
30 ⩽ 45	32–700	32–700

HORIZONTAL TIES

SKEW (°) \ SPAN (m)	7.4 ⩽ 8.4	8.4 ⩽ 9.4
0 ⩽ 15	7.5–200	7.5–250
15 ⩽ 30	7.5–200	7.5–300
30 ⩽ 45	15–300	15–340

TIE BAR CAPACITY (kN)

SKEW (°) \ SPAN (m)	7.4	8.4	9.4
0 ⩽ 15	36	55	77
15 ⩽ 30	45	69	96
30 ⩽ 45	68	103	140

LIFTING BEAM & COLUMN

0 ⩽ 45	254 x 254 x 73 UC S355

DRAWING No. NR/CIV/SD/2252

NOTES

1. FOR GENERAL NOTES REFER TO DRAWING No. NR/CIV/SD/2001.
2. LIFTING ANCHORS TO BE DEHA ANCHORS OR SIMILAR APPROVED.

NOTE
ANY SPAN BETWEEN:
7.4m AND 9.4m, INCREMENT OF 5mm.
ANY SKEW BETWEEN:
0deg AND 45deg, LEFT OR RIGHT.

Rev	Date	Description of revision	Designed	C'kd
B	27.04.12	SECOND ISSUE	SzT	SWF
A	12.10.10	FIRST ISSUE	SzT	SWF

Network Rail

Network Rail Infrastructure Ltd. Registered Office: Kings Place, 90 York Way, London, N1 9AG

Approved	P. Clark	Head of Engineering IP Central	PC	Apr 2013
	Name	Position	Signature	Date

Master copy with original signatures held by Network Rail HQ CIVIL ENGINEERING STANDARD DESIGN

© COPYRIGHT NETWORK RAIL 2013

STANDARD CONARCH OVERBRIDGE

GENERAL ARRANGEMENT EXTERNAL UNIT LIFTING DETAILS

Scale	AS SHOWN	
Drawing Number	NR/CIV/SD/2252	B

Copyright Network Rail
Provided by IHS under licence with Network Rail
No reproduction or networking permitted without licence from IHS
Licensee=Network Rail Group, User=swift, swift
Not for resale
2013-04-15 09:59:59 +0100

AVA Documents
Document Sharing Hub