Supplementary Information

The following information is associated with Network Rail Standard:
NR CIV/SD/247 Rev A

Additional Content Access

Click the link below to access CAD version of this drawing.

CAD Drawing

- CIV/SD/247

If you have any questions, or need assistance, please contact **IHS Support**

Information accessed via the links above is the property of the Copyright holder

IHS Additional Content Page

Documents
Document Sharing Hub

Copyright Network Rail
Provided by IHS under license with Network Rail
No reproduction or networking permitted without license from IHS
Full document details: NR NR-CIV-SD-247 ISSUE A 2011

Licensee=Weston Williamson/5989497001, User=sam, albett
Not for Resale, 03/27/2016 20:52:03 MDT

Full document details: NR NR-CIV-SD-247 ISSUE A 2011

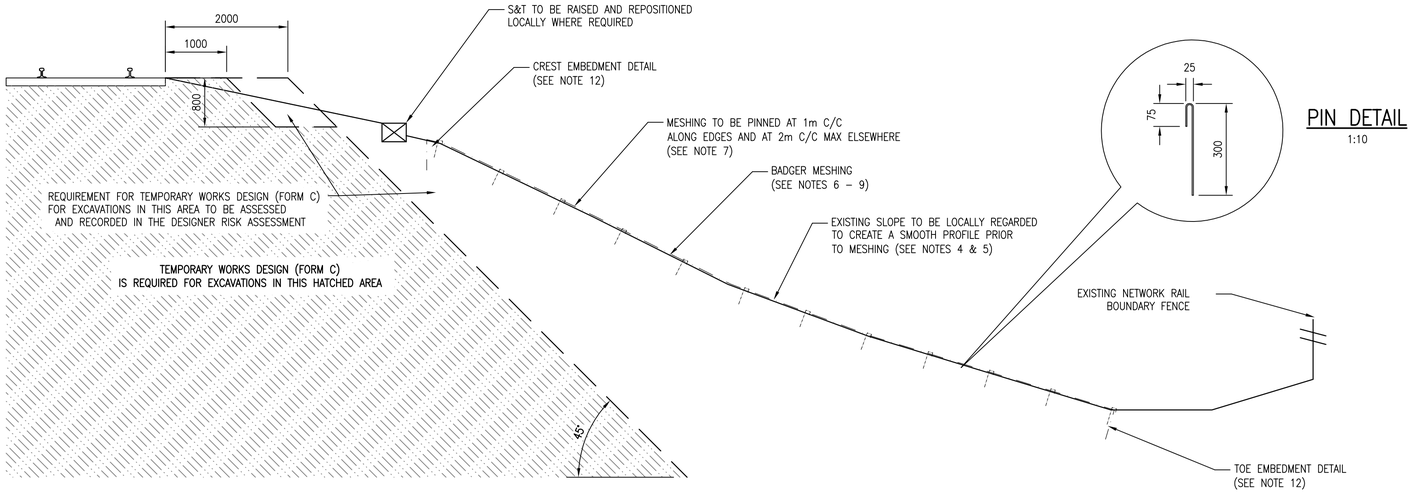

BADGER MESHING TYPICAL SECTION

1:50

PIN DETAIL

1:10

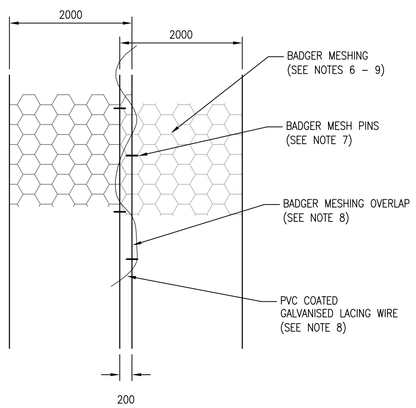

BADGER MESHING JOINTING DETAIL

1:50

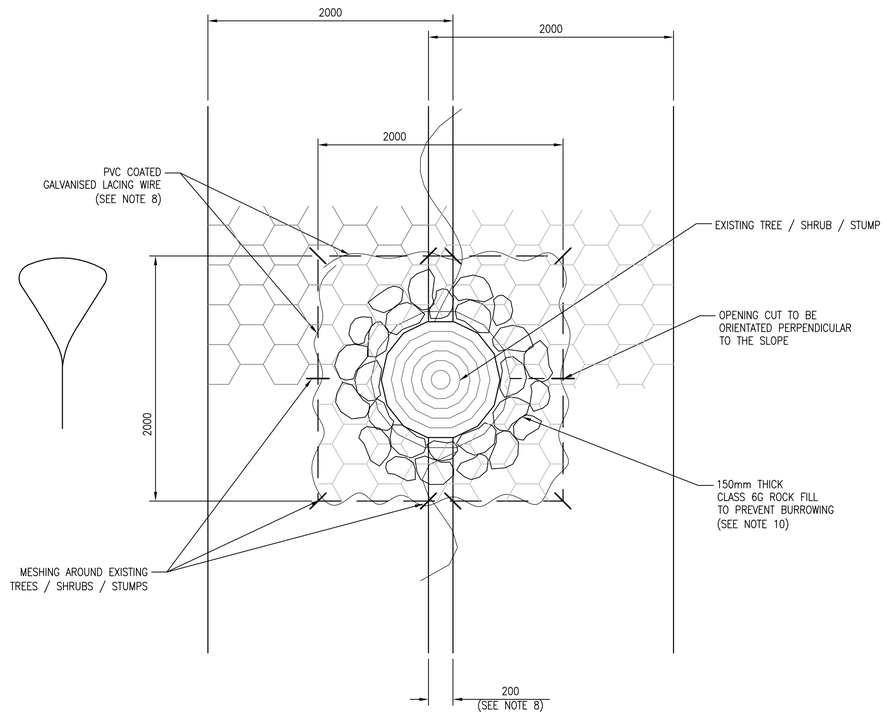

BADGER MESHING AROUND EXISTING TREES / SHRUBS AND STUMPS

1:25

OUTLINE CONSTRUCTION SEQUENCE

a) QUALIFIED ECOLOGIST TO UNDERTAKE AN ECOLOGY SURVEY OF THE SITE TO IDENTIFY THE PRESENCE OF ANY PROTECTED SPECIES.

b) ECOLOGICAL REPORT OF THE SITE TO BE ISSUED AND APPROVED PRIOR TO COMMENCEMENT OF ANY PHYSICAL WORKS.

c) COSS TO ESTABLISH A SAFE SYSTEM OF WORK IN ACCORDANCE WITH THE RULE BOOK AND THE CONTRACTOR'S WORKS PACKAGE PLAN.

d) LOCATE AND MARK OUT SERVICES PRESENT ON SITE AND ESTABLISH PROTECTION SYSTEMS FOR TRACKSIDE SERVICES.

e) SECURE PERIMETER FENCING TO PROTECT THE SITE AND THE RAILWAY BOUNDARY. (SEE DRAWING 240)

f) MOBILISE AND ESTABLISH ALL REQUIRED SAFETY/WELFARE FACILITIES, STORES, COMPOUND AND SITE OFFICES.

g) DISMANTLE THE RAILWAY BOUNDARY FENCE AS REQUIRED AND CONSTRUCT PLANT ACCESS TO THE EARTHWORK.

h) UNDERTAKE SLOPE DE–VEGETATION WORKS AS REQUIRED.

i) ENCOURAGE THE EXISTING BADGER POPULATION AWAY FROM THE EARTHWORK USING BADGER EXCLUSION LICENCE CONDITIONS.

j) GRADE/SMOOTH EXISTING EARTHWORK TO CREATE A UNIFORM SLOPE PROFILE.

k) INSTALL BADGER MESHING AROUND EXISTING TREES/SHRUBS OR OBSTRUCTIONS, PINNING AS REQUIRED.

l) APPLY BADGER MESHING TO THE RE–GRADED SLOPE PROFILE, PINNING AND JOINING WHERE REQUIRED AND EMBEDDING THE ENDS IN ACCORDANCE WITH DWG. NO. SD/242.

m) LAY 6G ROCK FILL AROUND THE BOUNDARY BETWEEN THE MACMAT–R AND OBSTRUCTION.

n) REINSTATE ALL AREAS OUTSIDE THE RAILWAY BOUNDARY AS REQUIRED.

o) DEMOBILISE.

DRAWING No. NR/CIV/SD/247

NOTES

1. THIS DRAWING FORMS A STANDARD DETAIL FOR BADGER MESHING AND SHOULD BE READ IN CONJUNCTION WITH THE GENERAL REQUIREMENTS OF DRAWING SD/240.

2. REFERENCE SHOULD ALSO BE MADE TO THE SCHEME SPECIFIC DRAWINGS AND SPECIFICATIONS FOR DETAILS OF THE WORKS TO BE UNDERTAKEN.

3. REMOVAL OF EXISTING TREES, SHRUBS, TOPSOIL AND SURFACE VEGETATION SHALL BE CARRIED OUT AT THE APPROPRIATE TIME OF YEAR TO PREVENT DISTURBANCE TO BREEDING BIRDS AND TO THE MINIMUM NECESSARY FOR IMPLEMENTING THE WORKS.

4. THE EXISTING EMBANKMENT SLOPE IS TO BE LOCALLY COMPACTED WHERE BURROWS ARE EVIDENT ON THE SLOPES THAT ARE NOT TO BE GROUTED.

5. THE EXISTING EMBANKMENT SLOPE IS TO BE LOCALLY GRADED AFTER COMPACTION WORKS TO CREATE A SMOOTH EARTHWORK PROFILE. ANY VOIDS RESULTING FROM DE–VEGETATION OR COMPACTION SHALL BE INFILLED WITH SELECTED GRANULAR MATERIAL.

15. BADGER MESHING TO BE MACMAT–R OR SIMILAR APPROVED PRODUCT, WITH PVC COATED DOUBLE TWIST HEXAGONAL WOVEN 60MM MESH SIZE AND A 2.2mm WIRE THICKNESS. SEE SD/247

16. MESHING TO BE PINNED AT 1m C/C ALONG EDGES, AND BETWEEN 1m AND 2m C/C ELSEWHERE, USING 4mm DIAMETER, 300mm LONG GALVANISED STEEL PINS. LONG DIMENSION ON DOWNSLOPE SIDE. SEE SD/247

17. BADGER MESHING IS TO BE LAID WITH A MINIMUM OVERLAP OF 200m. THE MESHING SHALL BE PINNED AT 1m INTERVALS ALONG EDGES, AND BETWEEN 1m AND 2m C/C ELSEWHERE, ON ALTERNATE SIDES OF THE JOIN. ALL JOINTS BETWEEN ADJACENT SHEETS OF MACMAT–R SHALL BE FORMED WITH CONTINUOUS 2.2mm PVC COATED GALVANISED LACING WIRE. SEE SD/247

18. BADGER MESHING TO BE LAID USING 2000mm WIDE LENGTHS. EXTENT OF BADGER MESHING TO BE APPROVED IN SITE SPECIFIC FORM A AND FORM B SUBMISSIONS. SEE SD/247

19. CLASS 6G ROCK FILL IS TO BE PLACED AROUND EXISTING TREES/SHRUBS OR OBSTRUCTIONS TO PREVENT BURROWING BENEATH THEM. THE 6G LAYER SHALL BE 150mm THICK AND OVERLAP THE BADGER NETTING BY A MINIMUM OF 300mm.

20. THE DIMENSION FROM THE CESS RAIL TO NETTING WILL BE SPECIFIED FOR EACH SITE BASED ON LINE SPEED, REFER TO RT/CE/S/069 ISSUE 2 AND SLOPE CONDITIONS.

21. EMBEDMENT INTO THE EXISTING EARTHWORK SHALL BE INCLUDED TO PREVENT BURROWING BENEATH THE NETTING. REFER TO NETTING EMBEDMENT DETAILS ON DWG. NO. SD/242. DETAIL 2 IS NOT TO BE USED WITH BADGER MESHING.

Rev	Date	Description of revision	Design'd	C'kd
A	MAY 2011	FIRST ISSUE	CAM	GJPT

Network Rail

Network Rail Infrastructure Ltd. Registered Office: Kings Place, 90 York Way, London, N1 9AG

	Name	Position	Signature	Date
Approved	P CLARK	Senior Prog. Eng. Manager Investment Projects Building & Civils	PC	MAY 2011

Master copy with original signatures held by Network Rail HQ CIVIL ENGINEERING STANDARD DESIGN

© COPYRIGHT NETWORK RAIL 2011

STANDARD ECOLOGICAL DETAIL

BADGER MESHING DETAIL

Scale	AS SHOWN @ A1	
Drawing Number	NR/CIV/SD/247	REV. A

Licensee:Hitachi Rail Europe Limited, Licence Date:2009/01/01, User:sam. allen
Copyright Network Rail
Provided by IHS under licence with Network Rail
No reproduction or distribution without prior written permission or licence from IHS

AVA Documents
Document Sharing Hub