Supplementary Information

The following information is associated with Network Rail Standard:
NR CIV/SD/2505 Rev A

Additional Content Access

Click the link below to access CAD version of this drawing.

CAD Drawing

- CIV/SD/2505

If you have any questions, or need assistance, please contact **IHS Support**

Information accessed via the links above is the property of the Copyright holder

IHS Additional Content Page

Documents
Document Sharing Hub

Copyright Network Rail
Provided by IHS under license with Network Rail
No reproduction or networking permitted without license from IHS
Full document details: NR NR-CIV-SD-2505 ISSUE A 2010

Licensee=Weston Williamson/5989497001, User=sam, albett
Not for Resale, 03/27/2016 21:15:06 MDT

DRAWING No. NR/CIV/SD/2505

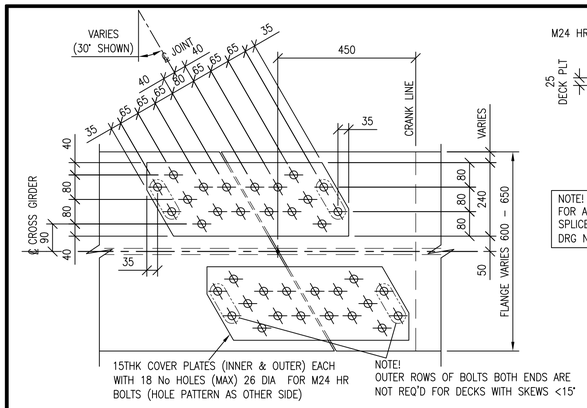

PLAN ON A–A SHOWING
TOP FLANGE SPLICE COVERS
1:10

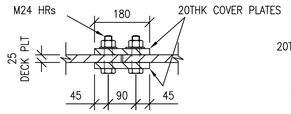

SECTION H–H
1:10

NOTE!
FOR ALTERNATIVE DECK SPLICE DETAIL REFER TO DRG NR/CIV/SD/2510

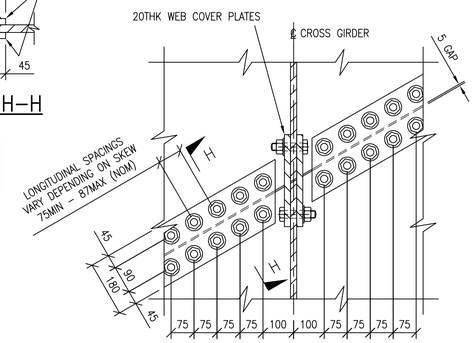

SECTION C–C
(30° SKEW SHOWN)
1:10

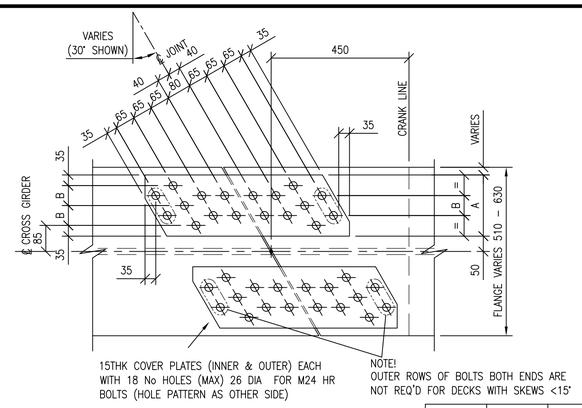

PLAN ON D–D SHOWING
TOP FLANGE SPLICE COVERS
1:10

SKEW	DIM A	DIM B
<15°	200	65
15°–30°	240	85

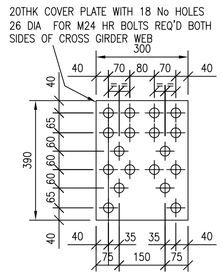

RURAL ALL PURPOSE OPTION
CROSS GIRDER WEB SPLICE
COVER PLATE DETAILS
1:10

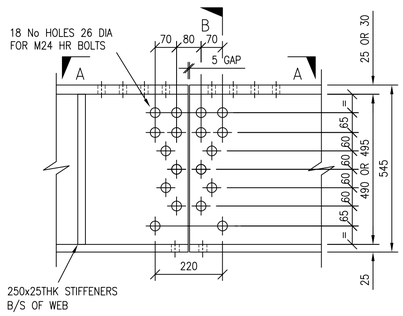

URBAN OPTION
CROSS GIRDER WEB SPLICE DETAILS
(COVER PLATES OMITTED)
1:10

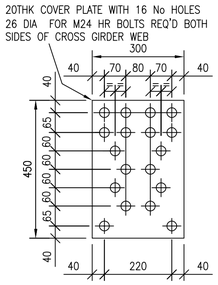

URBAN OPTION
CROSS GIRDER WEB SPLICE
COVER PLATE DETAILS
1:10

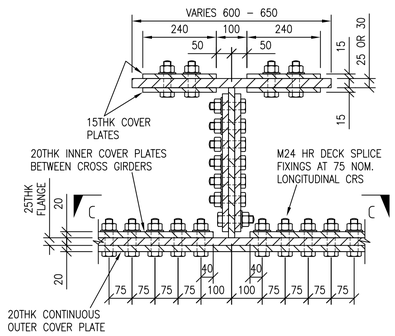

SECTION B–B
1:10

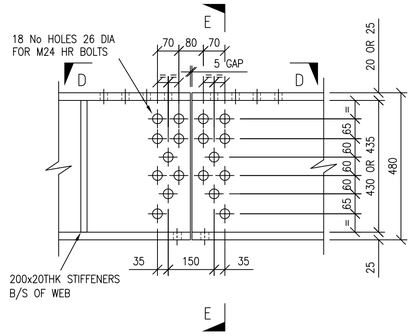

RURAL ALL PURPOSE OPTION
CROSS GIRDER WEB SPLICE DETAILS
(COVER PLATES OMITTED)
1:10

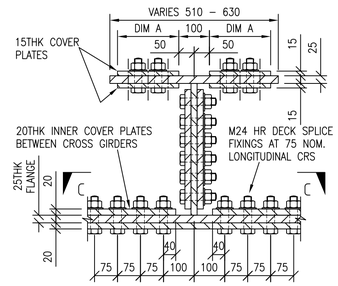

SECTION E–E
1:10

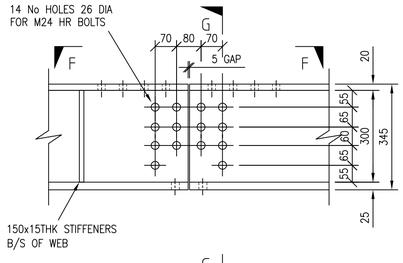

ACCOMMODATION OPTION
CROSS GIRDER WEB SPLICE DETAILS
(COVER PLATES OMITTED)
1:10

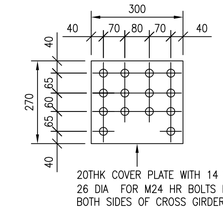

ACCOMMODATION OPTION
CROSS GIRDER WEB SPLICE
COVER PLATE DETAILS
1:10

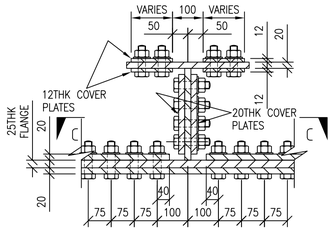

SECTION G–G
1:10

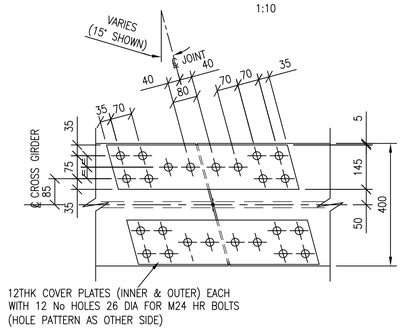

PLAN ON F–F SHOWING
TOP FLANGE SPLICE COVERS
(FOR SKEWS <15° ONLY)
1:10

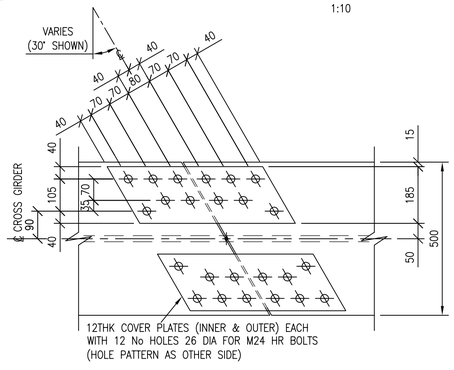

PLAN ON F–F SHOWING
TOP FLANGE SPLICE COVERS
(FOR SKEWS 15°–30° ONLY)
1:10

Rev	Date	Description of revision	Design'd	C'kd
A		Original Issue		

Network Rail

Network Rail Infrastructure Ltd.
Registered Office:
Kings Place
90 York Way
London
N1 9AG

Approved	P Clark	Senior Prog. Eng. Manager Infrastructure Projects, Bulding & Civils	P.C.	Sept '10
	Name	Position	Signature	Date

Master copy with original signatures held by Network Rail HQ CIVIL ENGINEERING STANDARD DESIGN

© COPYRIGHT NETWORK RAIL 2010

NETWORK RAIL OBERBRIDGE

CROSS GIRDER SPLICE DETAILS

Scale	AS NOTED	
Drawing Number	NR/CIV/SD/2505	A

FOR FORM B APPROVAL

1. ALL STEEL TO BS EN 1035 GRADE S355 J2+N
2. ALL DIMENSIONS ARE IN MILLIMETRES
3. FOR DETAILS OF CROSS GIRDERS REFER TO DRAWINGS NR/CIV/SD/2502, /2503 & /2504
4. FOR DETAILS OF ALTERNATIVE LONGITUDINAL DECK REFER TO DRAWING NR/CIV/SD/2510
5. WEB SPLICES TO BE FITTED AND FULLY TORQUED PRIOR TO INSTALLATION OF FLANGE COVER PLATES
6. ALL SPLICE BOLTS ARE M24 HR BOLTS UNLESS NOTED OTHERWISE
7. UNLESS NOTED OTHERWISE THE DESIGN REQUIRES THE FOLLOWING MINIMUM EDGE DISTANCE AND PITCH FOR BOLTS:–
   EDGE DISTANCE: 1.2 x BOLT HOLE DIA
   BOLT PITCH: 2.4 x BOLT HOLE DIA

Full document details: NR NR-CIV-SD-2505 ISSUE A 2010
Licensed Hitachi Willowbrook 09/04/2021. User-sam, allan
Uncontrolled when printed. Printed on 09/04/2021
Copyright Network Rail
Provided by IHS under licence with Network Rail
No reproduction or distribution permitted without written licence from IHS
Documents Document Sharing Hub