Supplementary Information

The following information is associated with Network Rail Standard:
NR CIV/SD/2507 Rev A

Additional Content Access

Click the link below to access CAD version of this drawing.

CAD Drawing

- CIV/SD/2507

If you have any questions, or need assistance, please contact **IHS Support**

Information accessed via the links above is the property of the Copyright holder

IHS Additional Content Page

Documents
Document Sharing Hub

--`,,,,,,`,,,,,,`,,`,,,,,,,,`-`-`,,`,,`,`,,`---

Copyright Network Rail
Provided by IHS under license with Network Rail
No reproduction or networking permitted without license from IHS
Full document details: NR NR-CIV-SD-2507 ISSUE A 2010

Licensee=Weston Williamson/5989497001, User=sam, albett
Not for Resale, 03/27/2016 21:15:57 MDT

DRAWING No. NR/CIV/SD/2507

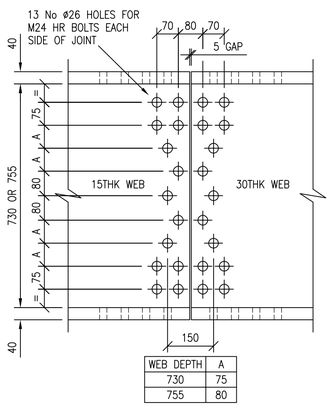

WEB DEPTH	A
730	75
755	80

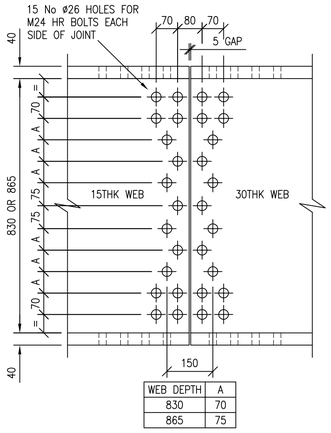

WEB DEPTH	A
830	70
865	75

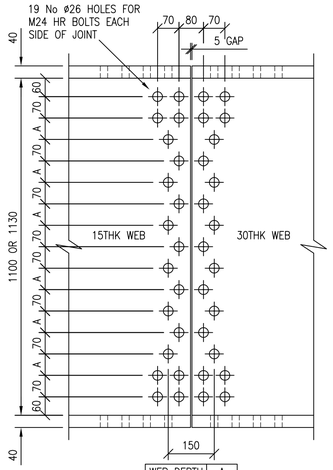

WEB DEPTH	A
1100	70
1130	75

URBAN OPTION END TRIMMER WEB SPLICE DETAILS (COVER PLATES OMITTED)

1:10

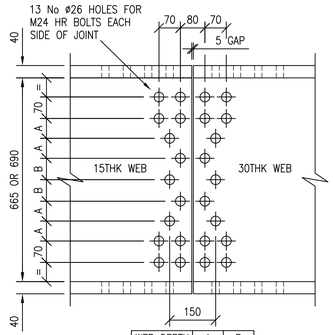

WEB DEPTH	A	B
665	65	70
690	70	75

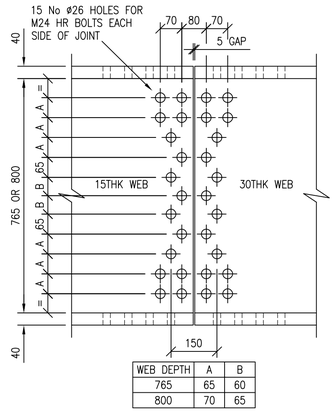

WEB DEPTH	A	B
765	65	60
800	70	65

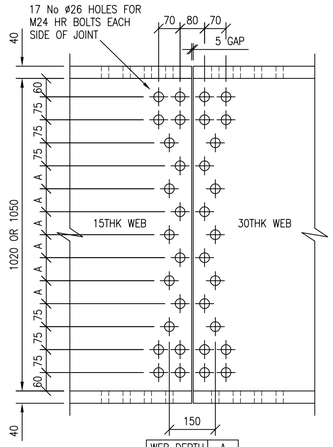

WEB DEPTH	A
1020	75
1050	80

RURAL ALL PURPOSE OPTION END TRIMMER WEB SPLICE DETAILS (COVER PLATES OMITTED)

1:10

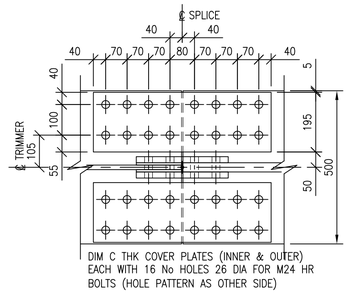

TYPICAL PLAN ON TOP FLANGE SHOWING SPLICE COVERS (FOR BRIDGES WITH 0° SKEW ONLY)

1:10

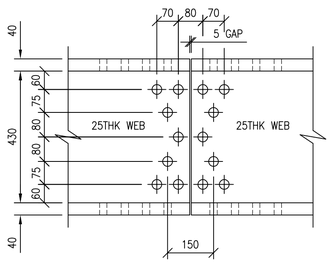

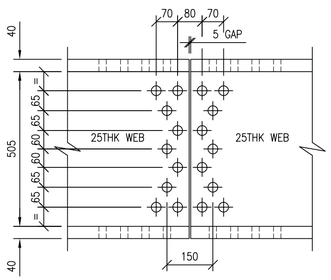

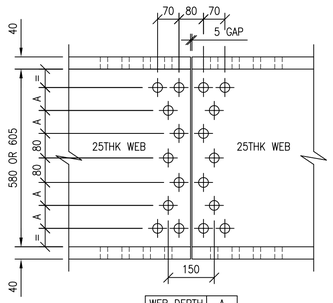

WEB DEPTH	A
580	75
605	80

ACCOMMODATION OPTION END TRIMMER WEB SPLICE DETAILS (COVER PLATES OMITTED)

1:10

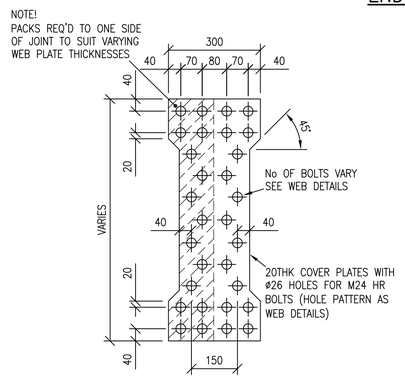

URBAN & RURAL A.P. OPTION WEB SPLICE COVER PLATE DETAIL

1:10

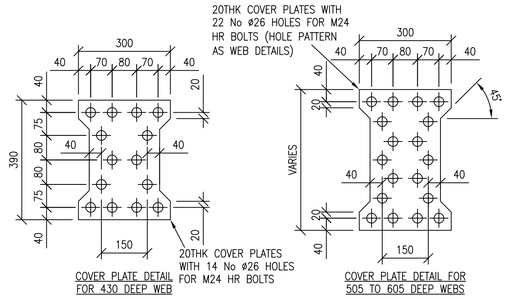

ACCOMMODATION OPTION WEB SPLICE COVER PLATE DETAILS

1:10

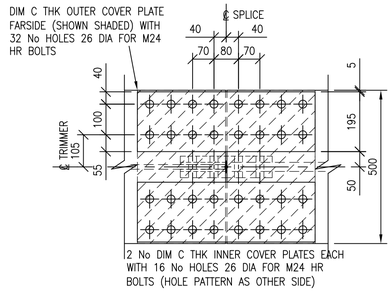

TYPICAL PLAN ON BTM FLANGE SHOWING SPLICE COVERS (FOR BRIDGES WITH 0° SKEW ONLY)

1:10

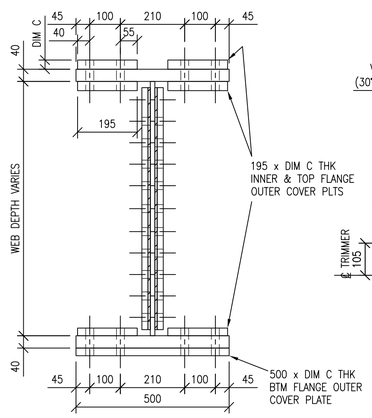

TYPICAL SECTION THRO' END TRIMMER SPLICE (ALL OPTIONS)

1:10

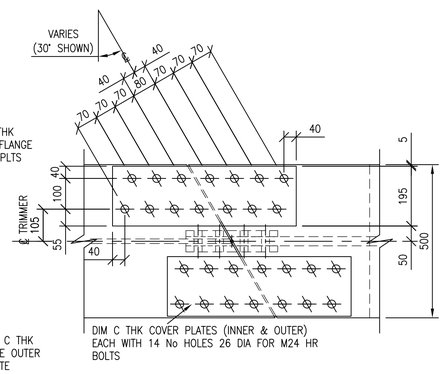

TYPICAL PLAN ON TOP FLANGE SHOWING SPLICE COVERS (FOR ALL OPTIONS SKEWED <30°)

1:10

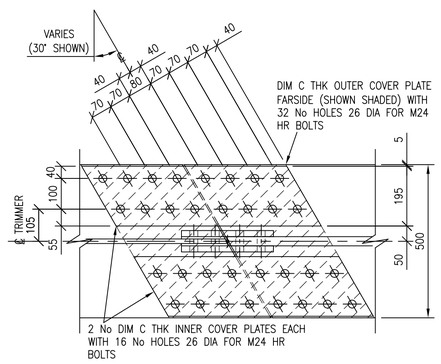

TYPICAL PLAN ON BTM FLANGE SHOWING SPLICE COVERS (FOR ACCOMMODATION OPTION SKEWED <30°)

1:10

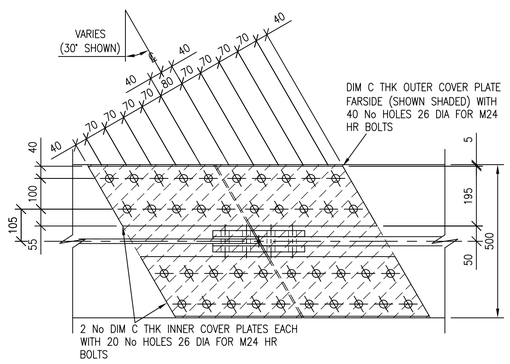

TYPICAL PLAN ON BTM FLANGE SHOWING SPLICE COVERS (FOR URBAN & RURAL A.P. OPTION SKEWED <30°)

1:10

OPTION	DIM C
URBAN	30THK
RURAL ALL PURPOSE	30THK
ACCOMMODATION	25THK

1. ALL STEEL TO BS EN 1035 GRADE S355 J2+N
2. ALL DIMENSIONS ARE IN MILLIMETRES
3. WEB SPLICES TO BE FITTED AND FULLY TORQUED PRIOR TO INSTALLATION OF FLANGE COVER PLATES
4. ALL SPLICE BOLTS ARE M24 HR BOLTS
5. THE DESIGN REQUIRES THE FOLLOWING MINIMUM EDGE DISTANCE AND PITCH FOR BOLTS:–
   EDGE DISTANCE: 1.2 x BOLT HOLE DIA
   BOLT PITCH: 2.4 x BOLT HOLE DIA

FOR FORM B APPROVAL

Rev	Date	Description of revision	Design'd	C'kd
A	Aug '10	1st Issue	SB	AM

Network Rail

Network Rail Infrastructure Ltd.
Registered Office:
Kings Place
90 York Way
London
N1 9AG

	Name	Position	Signature	Date
Approved	P Clark	Senior Prog. Eng. Manager Infrastructure Projects, Buiding & Civils	PC	Sept '10

Master copy with original signatures held by Network Rail HQ
CIVIL ENGINEERING STANDARD DESIGN

© COPYRIGHT NETWORK RAIL 2010

OVERBRIDGE

TRIMMER SPLICE DETAILS

Scale	AS NOTED
Drawing Number	NR/CIV/SD/2507 A

Full document details: NR NR-CIV SD 2507 ISSUE A 2010
Documents Shared Hub
Copyright Network Rail
Provided by IHS under licence with Network Rail
Licensee=Atkins Williams/5935412001, User=sam, allnet
2010-08-24 09:43:42 Z
Source from IHS