Supplementary Information

The following information is associated with Network Rail Standard:
NR CIV/SD/261 Rev C

Additional Content Access

Click the link below to access CAD version of this drawing.

CAD Drawing

- CIV/SD/261

If you have any questions, or need assistance, please contact **IHS Support**

Information accessed via the links above is the property of the Copyright holder

IHS Additional Content Page

Documents
Document Sharing Hub

Copyright Network Rail
Provided by IHS under license with Network Rail
No reproduction or networking permitted without license from IHS
Full document details: NR NR-CIV-SD-261 ISSUE C 2011

Licensee=Weston Williamson/5989497001, User=sam, albett
Not for Resale, 03/27/2016 20:52:59 MDT

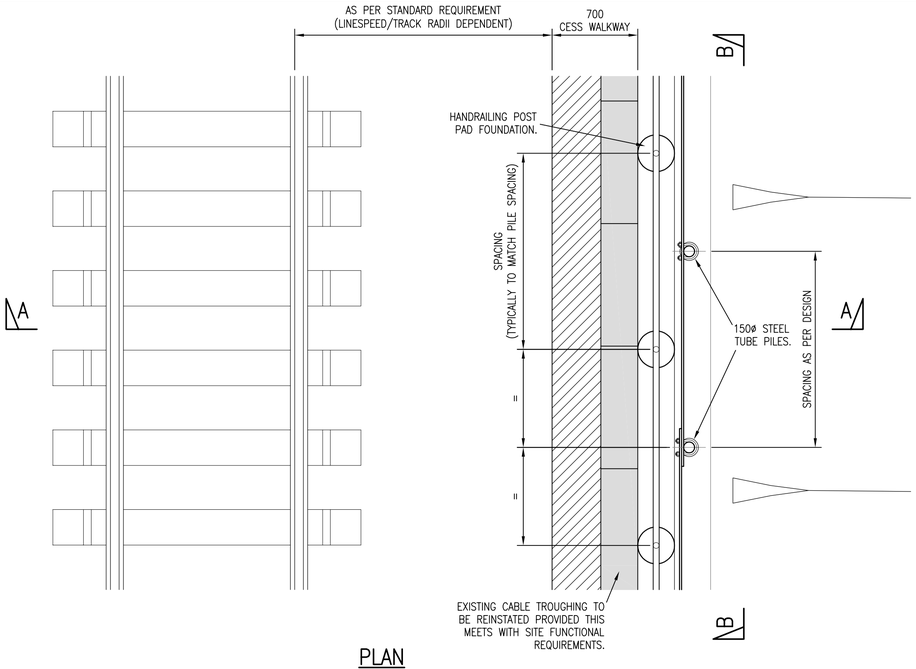

PLAN
SCALE 1:25

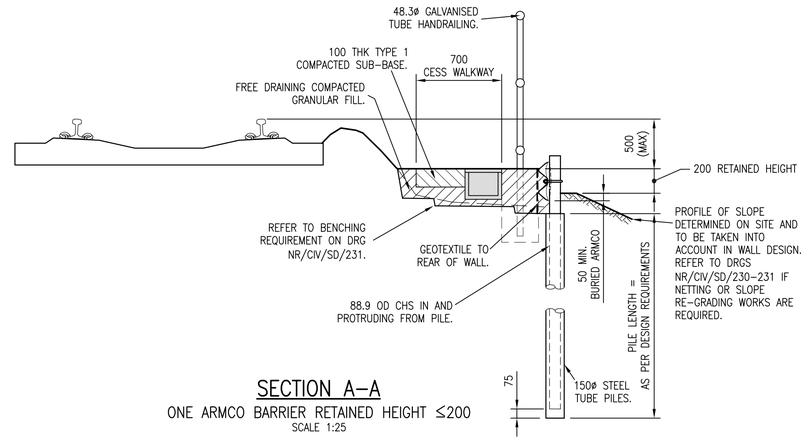

SECTION A–A
ONE ARMCO BARRIER RETAINED HEIGHT ≤200
SCALE 1:25

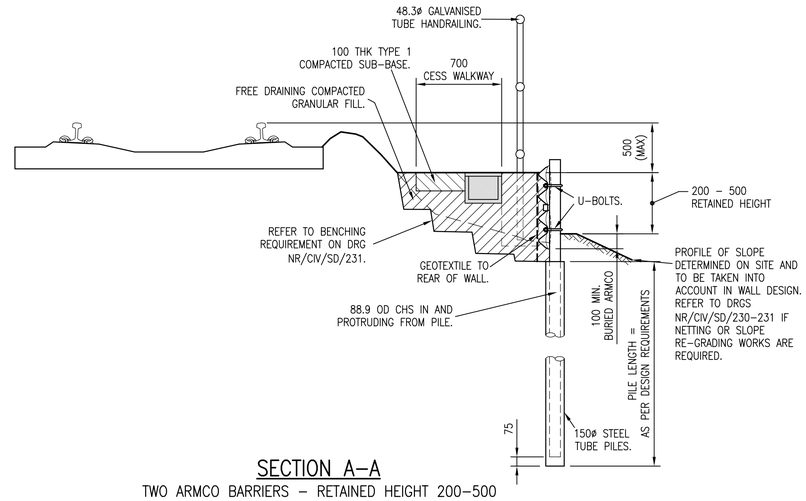

SECTION A–A
TWO ARMCO BARRIERS – RETAINED HEIGHT 200–500
SCALE 1:25

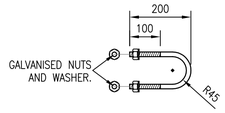

U–BOLT DETAIL
SCALE 1:10

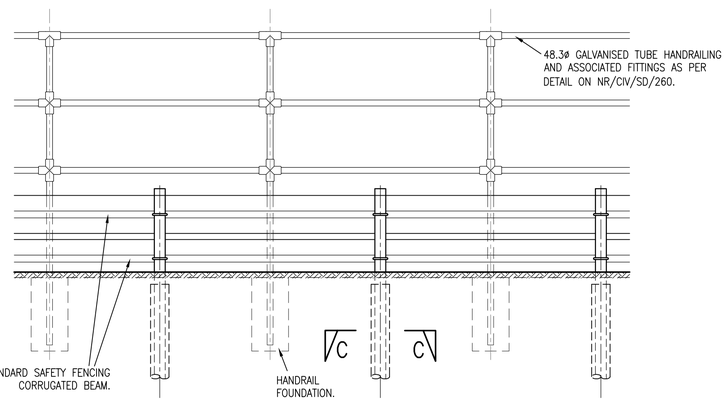

SECTION B–B
TWO ARMCO WALL SHOWN
SCALE 1:25

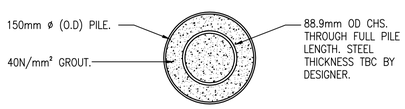

SECTION C–C
SCALE 1:5

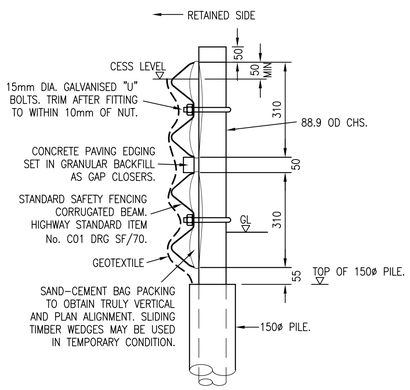

TYPICAL ARMCO FIXING DETAIL
SCALE 1:10

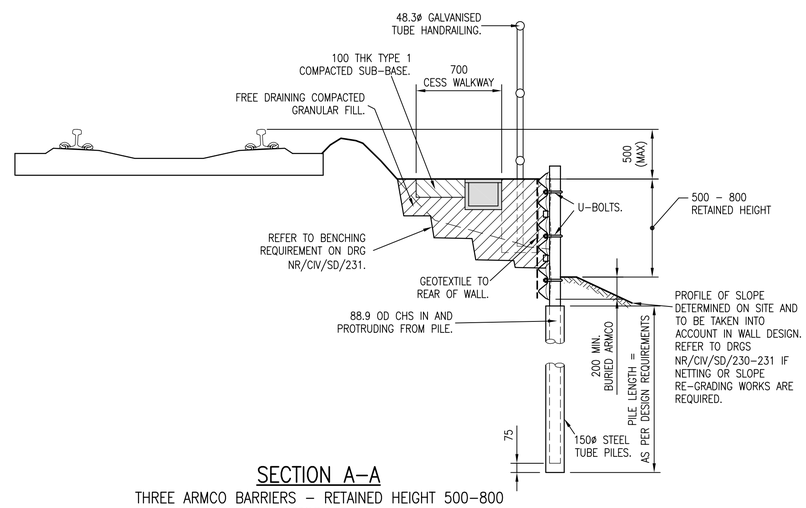

SECTION A–A
THREE ARMCO BARRIERS – RETAINED HEIGHT 500–800
SCALE 1:25

DRAWING No. NR/CIV/SD/261

NOTES

1 FOR GENERAL NOTES SEE DRG NR/CIV/SD/260.

2 FOR GENERIC RISK ASSESSMENT, REFER TO DRG NR/CIV/SD/260 TABLE 1. DESIGNER TO COMPILE SITE SPECIFIC RISK ASSESSMENT.

A GENERAL

A1 DESIGNER WILL NEED TO CONFIRM THE WALL AND SLOPE STABILITY AT ALL THE CONSTRUCTION STAGES.

A2 OFFSET DIMENSIONS FOR WALL MAY NEED TO BE INCREASED TO FACILITATE CONSTRUCTION.

A3 THE DESIGNER OF A SCHEME SHALL BE RESPONSIBLE FOR SPECIFYING THE REQUIRED PILE DEPTH AND SPACING.

A4 ANY REQUIREMENT TO ALLOW FOR FUTURE TRACK LIFTS WHEN DEFINING THE CESS WALKWAY LEVEL WILL NEED TO BE AGREED WITH THE ASSET ENGINEER AS PART OF THE PROJECT REMIT.

B SPECIFICATION

STEELWORK

B1 STEELWORK TO BE GRADE S275 (UNLESS NOTIFIED OTHERWISE) IN ACCORDANCE WITH EN 1993–1 AND BS EN 10025.

B2 ALL STEELWORK TO BE HOT DIP GALVANISED TO BS EN ISO 1461 TO ACHIEVE A COATING THICKNESS = 85 MICRONS.

B3 ALL "U" BOLTS AND NAIL DIAMETER HOLE/SLOT CLEARANCES TO BE PHYSICALLY CHECKED PRIOR TO WORKS (TO ALLOW FOR GALVANISING).

GROUT

B4 CEMENTITIOUS GROUT FOR PILE INSTALLATION SHALL HAVE A MINIMUM CUBE STRENGTH OF 40N/mm² (28 DAYS). WATER/CEMENT RATIO NOT TO EXCEED 0.45 GROUT CUBE SAMPLES (3No.) ARE TO BE TAKEN AND TESTED INITIALLY EVERY 5TH SOIL NAIL INSTALLATION.

BACKFILL

B5 GRANULAR FILL MATERIALS TO BE FREE DRAINING AND PLACED AND COMPACTED IN ACCORDANCE WITH THE SPECIFICATION FOR HIGHWAYS WORKS. SUITABLE FILL IS HA CLASS 6N GRANULAR FILL. OTHER CLASSES OF BACKFILL CAN BE CONSIDERED FOR USE BEHIND THE WALL SUBJECT TO THE NECESSARY LABORATORY CLASSIFICATION AND STRENGTH TESTS AND WALL STABILITY DESIGN.

PROTECTIVE TREATMENT

B6 THE PROTECTIVE SYSTEM SHALL BE IN ACCORDANCE WITH NR/SP/CIV/039 (REFERRED TO AS RT98)

B7 PROTECTIVE TREATMENTS SHALL BE APPLIED IN ACCORDANCE WITH NR/GN/CIV/002.

B8 NOTE THE STEEL ON THE OUTSIDE OF THE DRIVEN TUBULAR PILE IS CONSIDERED SACRIFICIAL.

Rev	Date	Description of revision	Design'd	C'kd
C	MAY 2011	THIRD ISSUE	RKA	AW
B	25.05.07	SECOND ISSUE	GPR	NGAY

Network Rail

Network Rail Infrastructure Ltd. Registered Office:
Kings Place, 90 York Way, London, N1 9AG

Approved	P CLARK	Senior Prog. Eng. Manager Investment Projects Building & Civils	PC	MAY 2011
	Name	Position	Signature	Date

Master copy with original signatures held by Network Rail HQ
CIVIL ENGINEERING STANDARD DESIGN

© COPYRIGHT NETWORK RAIL 2010

CESS SUPPORT STRUCTURES

UNANCHORED DRIVEN TUBULAR PILE ARMCO TYPE

Scale	AS SHOWN	
Drawing Number	NR/CIV/SD/261	REV. C

Full document details: NR NR-CIV-SD-261ISSUE C 2011
Documents Document Sharing Hub
Copyright Network Rail
Provided by IHS under licence with Network Rail
Reproduced by permission of the Controller of HMSO and/or Network Rail
Licensee=Halcrow Willbros/5935951001, User=sam, allnet
Not for resale, 2011-05-25 07:00:00 MDT