The following information is associated with Network Rail Standard:
NR CIV/SD/262 Rev D

Additional Content Access

Click the link below to access CAD version of this drawing.

CAD Drawing

- CIV/SD/262

If you have any questions, or need assistance, please contact **IHS Support**

Information accessed via the links above is the property of the Copyright holder

IHS Additional Content Page

--`,,,,,,`,,,,,,`,,`,,,,,,,,``-`-`,,`,,`,`,,`---

Documents
Document Sharing Hub

Copyright Network Rail
Provided by IHS under license with Network Rail
No reproduction or networking permitted without license from IHS
Full document details: NR NR-CIV-SD-262 ISSUE D 2012

Licensee=Weston Williamson/5989497001, User=sam, albett
Not for Resale, 03/27/2016 19:51:15 MDT

Copyright Network Rail
Provided by IHS under license with Network Rail
No reproduction or networking permitted without license from IHS
Full document details: NR NR-CIV-SD-262 ISSUE D 2012

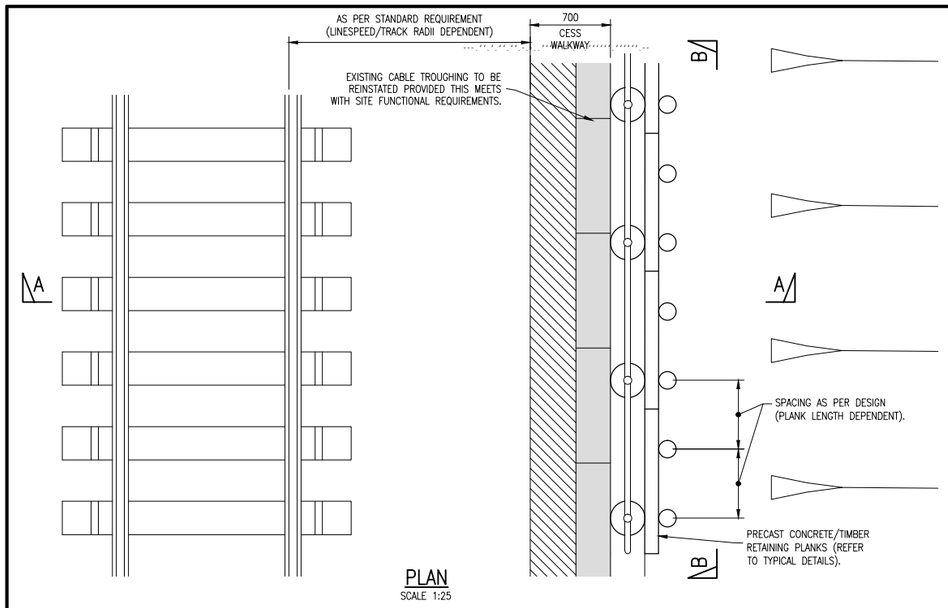

PLAN
SCALE 1:25

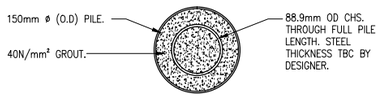

SECTION C–C
SCALE 1:5

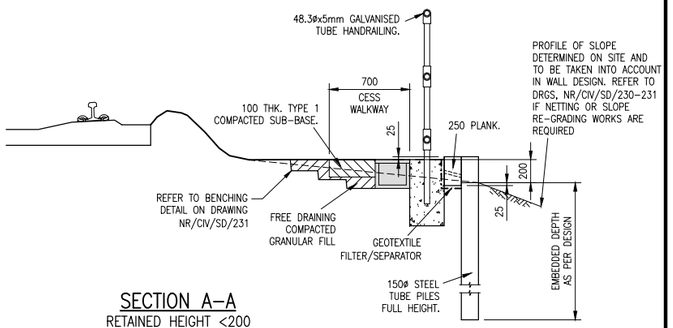

SECTION A–A
RETAINED HEIGHT <200
SCALE 1:25

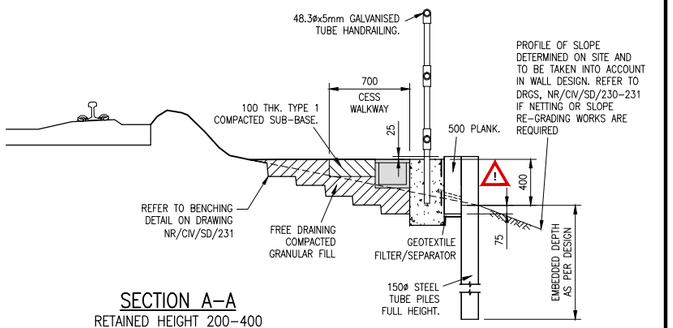

SECTION A–A
RETAINED HEIGHT 200–400
SCALE 1:25

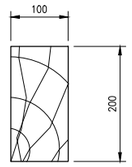

TYPICAL SECTION THROUGH
200mm TIMBER PLANK
TYPICAL HARDWOOD SECTION SIZE SHOWN
SCALE 1:5

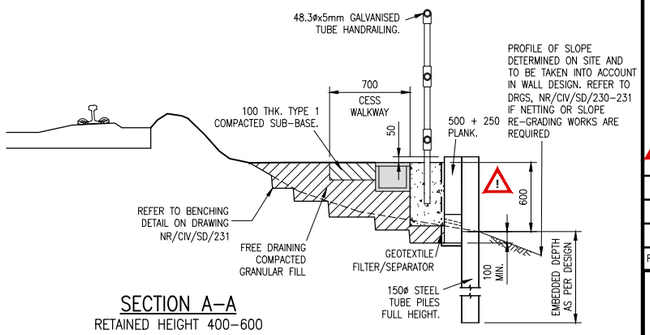

SECTION A–A
RETAINED HEIGHT 400–600
SCALE 1:25

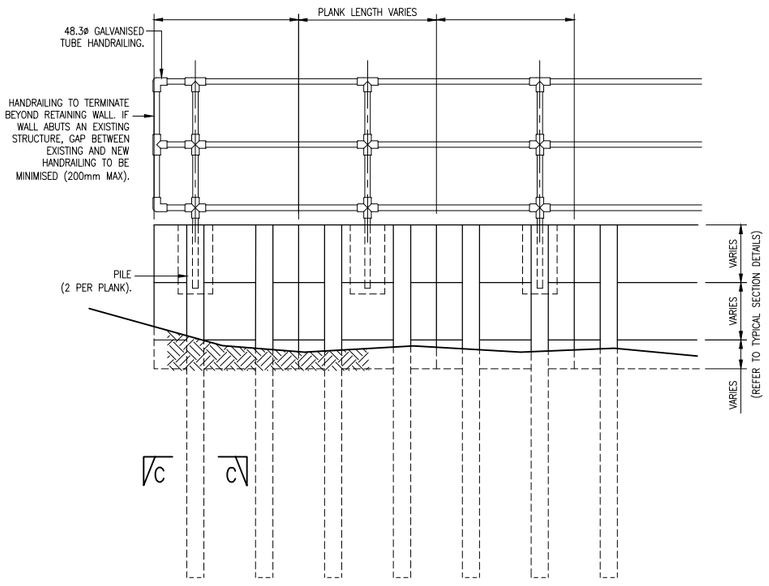

SECTION B–B
SCALE 1:25

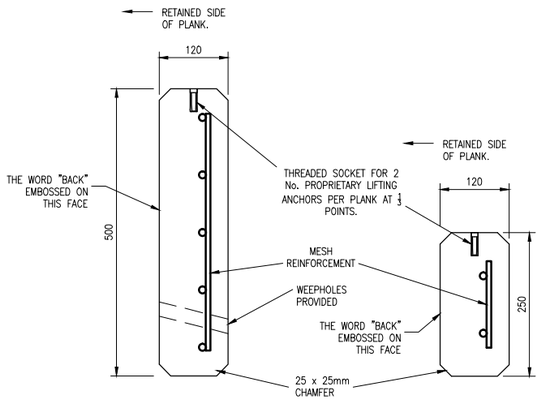

TYPICAL SECTION THROUGH
500mm PRECAST PLANK
SCALE 1:5

TYPICAL SECTION THROUGH
250mm PRECAST PLANK
SCALE 1:5

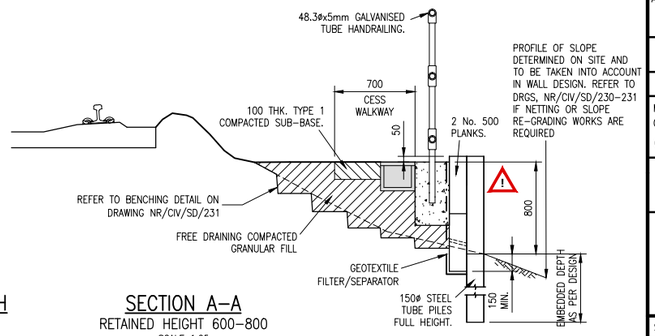

SECTION A–A
RETAINED HEIGHT 600–800
SCALE 1:25

DRAWING No. NR/CIV/SD/262

NOTES

1 FOR GENERAL NOTES SEE DRG NR/CIV/SD/260.

2 FOR GENERIC RISK ASSESSMENT, REFER TO DRG NR/CIV/SD/260 TABLE 1. DESIGNER TO COMPILE SITE SPECIFIC RISK ASSESSMENT.

A GENERAL

A1 DESIGNER WILL NEED TO CONFIRM THE WALL AND SLOPE STABILITY AT ALL THE CONSTRUCTION STAGES.

A2 OFFSET DIMENSIONS FOR WALL MAY NEED TO BE INCREASED TO FACILITATE CONSTRUCTION.

A3 THE DESIGNER OF A SCHEME SHALL BE RESPONSIBLE FOR SPECIFYING THE REQUIRED PILE DEPTH AND SPACING.

A4 ANY REQUIREMENT TO ALLOW FOR FUTURE TRACK LIFTS WHEN DEFINING THE CESS WALKWAY LEVEL WILL NEED TO BE AGREED WITH THE ASSET ENGINEER AS PART OF THE PROJECT REMIT.

B SPECIFICATION

STEELWORK

B1 STEELWORK TO BE GRADE S275 (UNLESS NOTIFIED OTHERWISE) IN ACCORDANCE WITH EN 1993–1 AND BS EN 10025.

B2 ALL STEELWORK TO BE HOT DIP GALVANISED TO BS EN ISO 1461 TO ACHIEVE A COATING THICKNESS = 85 MICRONS.

GROUT

B3 CEMENTITIOUS GROUT FOR PILE INSTALLATION SHALL HAVE A MINIMUM CUBE STRENGTH OF 40N/mm² (28 DAYS). WATER/CEMENT RATIO NOT TO EXCEED 0.45 GROUT CUBE SAMPLES (3No.) ARE TO BE TAKEN AND TESTED INITIALLY EVERY 5TH SOIL NAIL INSTALLATION.

BACKFILL

B4 GRANULAR FILL MATERIALS TO BE FREE DRAINING AND PLACED AND COMPACTED IN ACCORDANCE WITH THE SPECIFICATION FOR HIGHWAYS WORKS. SUITABLE FILL IS HA CLASS 6N GRANULAR FILL. OTHER CLASSES OF BACKFILL CAN BE CONSIDERED FOR USE BEHIND THE WALL SUBJECT TO THE NECESSARY LABORATORY CLASSIFICATION AND STRENGTH TESTS AND WALL STABILITY DESIGN.

REINFORCED CONCRETE

B5 ALL REINFORCEMENT SHALL BE HIGH YIELD, DEFORMED TYPE 2 BARS, IN ACCORDANCE WITH B.S.4449;2005.

B6 CONCRETE TO BE IN ACCORDANCE WITH BS. 8500 AND EN 206–1. A COMPRESSIVE STRENGTH OF C35/45 MINIMUM IS REQUIRED FOR THE PLANKS.

TIMBER

B7 TIMBER SHALL BE D30 MINIMUM STRENGTH CLASS HARDWOOD IN ACCORDANCE WITH BS EN 338.

B8 ALL WOOD COMPONENTS ARE TO BE PRE–APPROVED BY THE EMPLOYER'S REPRESENTATIVE FOR SOURCE AND TREATMENT.

PROTECTIVE TREATMENT

B9 THE PROTECTIVE SYSTEM SHALL BE IN ACCORDANCE WITH NR/SP/CIV/039 (REFERRED TO AS RT98)

B10 PROTECTIVE TREATMENTS SHALL BE APPLIED IN ACCORDANCE WITH NR/GN/CIV/002.

B11 NOTE THE STEEL ON THE OUTSIDE OF THE DRIVEN TUBULAR PILE IS CONSIDERED SACRIFICIAL.

! ELEMENT POTENTIALLY UNSTABLE DURING TRANSPORTATION OR IN TEMPORARY CONDITION.

Rev	Date	Description of revision	Design'd	C'kd
D	MAY 2012	HAZARD TRIANGLE ADDED	MV	RES
C	MAY 2011	THIRD ISSUE	RKA	AW
B	25.05.07	SECOND ISSUE	GPR	NGAY

Network Rail

Network Rail Infrastructure Ltd. Registered Office: Kings Place, 90 York Way, London, N1 9AG

Approved	P CLARK	Senior Prog. Eng. Manager Investment Projects Building & Civils	PC	MAY 2012
	Name	Position	Signature	Date

Master copy with original signatures held by Network Rail HQ CIVIL ENGINEERING STANDARD DESIGN

© COPYRIGHT NETWORK RAIL 2010

CESS SUPPORT STRUCTURES

UNANCHORED DRIVEN TUBULAR PILE PANEL TYPE

Scale	AS SHOWN
Drawing Number	NR/CIV/SD/262
REV.	D

Licensee-Weston Williamson:5389497001, User-sam. albett
Not for Resale, 03/27/2016 19:51:15 MDT
AVA Documents
Document Sharing Hub