Supplementary Information

The following information is associated with Network Rail Standard:
**NR CIV/SD/263** Rev D

## Additional Content Access

Click the link below to access CAD version of this drawing.

### CAD Drawing

- CIV/SD/263

If you have any questions, or need assistance, please contact **IHS Support**

Information accessed via the links above is the property of the Copyright holder

**IHS Additional Content Page**

Documents
Document Sharing Hub

Copyright Network Rail
Provided by IHS under license with Network Rail
No reproduction or networking permitted without license from IHS
Full document details: NR NR-CIV-SD-263 ISSUE D 2011

Licensee=Weston Williamson/5989497001, User=sam, albett
Not for Resale, 03/27/2016 20:52:09 MDT

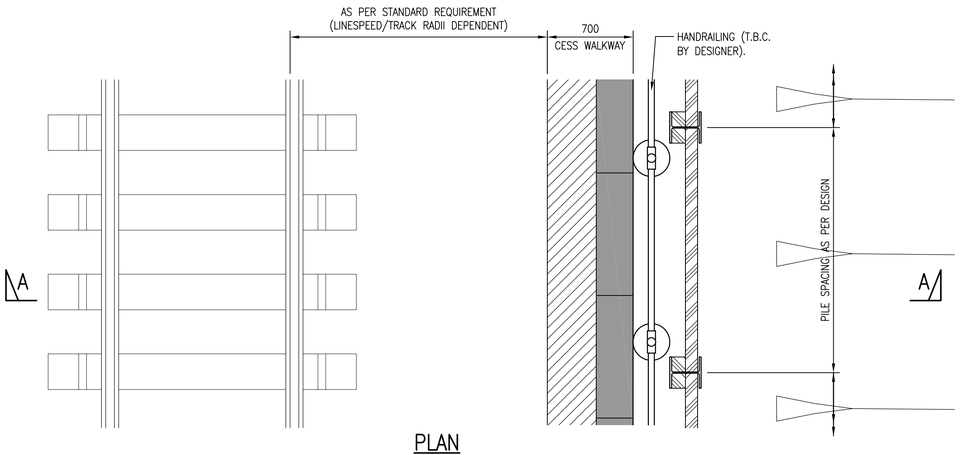


## PLAN
(EMBANKMENT SHOWN)
SCALE 1:25

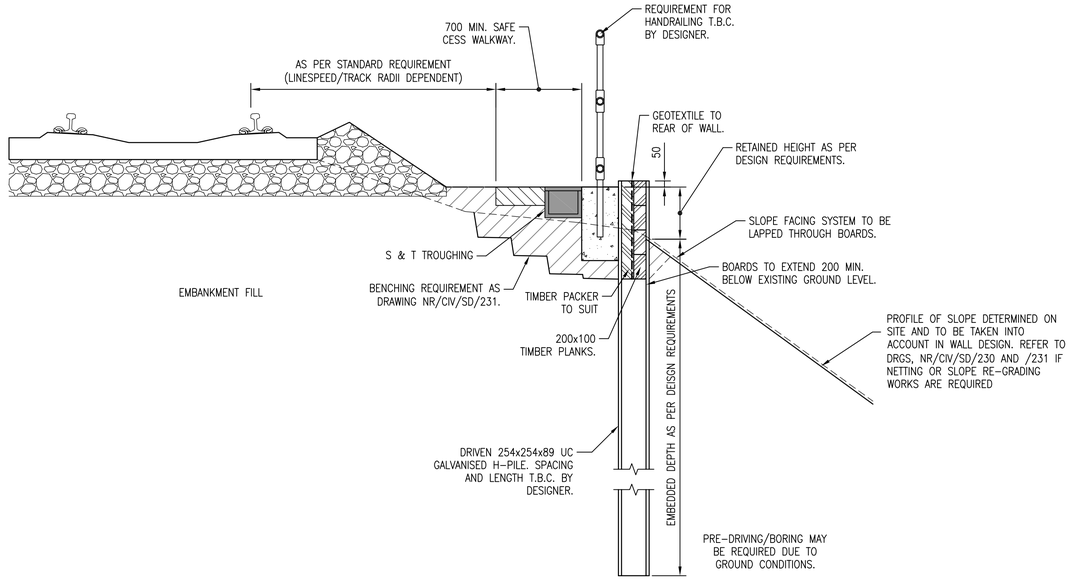


## SECTION A–A SHOWING TYPICAL EMBANKMENT APPLICATION
SCALE 1:25

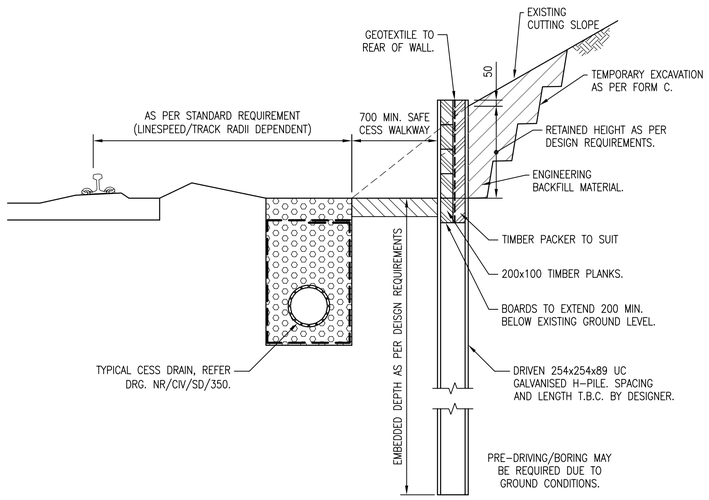


## SECTION SHOWING TYPICAL CUTTING APPLICATION – OPTION 1
SCALE 1:25

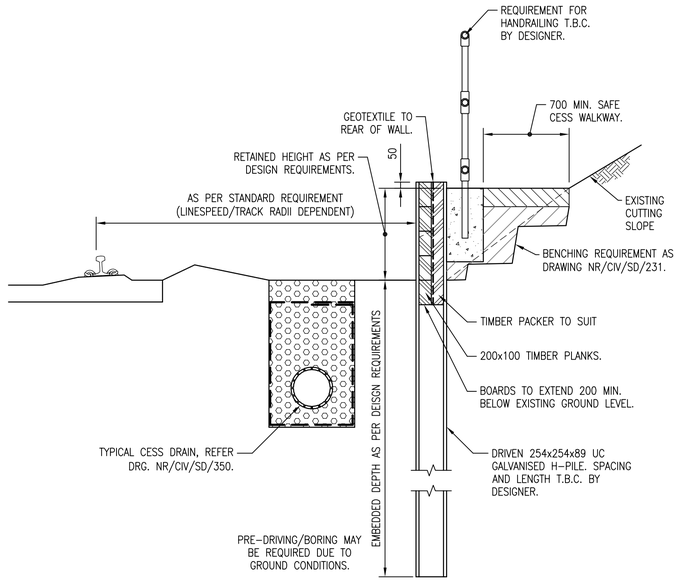


## SECTION SHOWING TYPICAL CUTTING APPLICATION – OPTION 2
SCALE 1:25

DRAWING No. NR/CIV/SD/263

NOTES

A1 FOR GENERAL NOTES SEE DRG NR/CIV/SD/260.

A2 FOR GENERIC RISK ASSESSMENT, REFER TO DRG NR/CIV/SD/260 TABLE 1. DESIGNER TO COMPILE SITE SPECIFIC RISK ASSESSMENT.

B GENERAL

B1 DESIGNER WILL NEED TO CONFIRM THE WALL AND SLOPE STABILITY AT ALL THE CONSTRUCTION STAGES.

B2 OFFSET DIMENSIONS FOR WALL MAY NEED TO BE INCREASED TO FACILITATE CONSTRUCTION.

B3 THE DESIGNER OF A SCHEME SHALL BE RESPONSIBLE FOR SPECIFYING THE REQUIRED PILE DEPTH AND SPACING.

B4 ANY REQUIREMENT TO ALLOW FOR FUTURE TRACK LIFTS WHEN DEFINING THE CESS WALKWAY LEVEL WILL NEED TO BE AGREED WITH THE ASSET ENGINEER AS PART OF THE PROJECT REMIT.

C SPECIFICATION

STEELWORK

C1 STEELWORK TO BE GRADE S275 (UNLESS NOTIFIED OTHERWISE) IN ACCORDANCE WITH EN 1993-1 AND BS EN 10025.

C2 ALL EXPOSED SECTIONS OF STEELWORK TO BE HOT DIP GALVANISED TO BS EN ISO 1461 TO ACHIEVE A COATING THICKNESS = 85 MICRONS. DESIGNER CAN CONSIDER OTHER PROTECTIVE TREATMENT TO STEELWORK TO PROVIDE REQUIRED DESIGN LIFE.

C3 ANY BLEMISHES ON THE EXPOSED STEEL COMPONENTS TO BE PAINTED WITH ZINC-BASED ANTI-CORROSION PAINT AFTER INSTALLATION.

BACKFILL

C4 GRANULAR FILL MATERIALS TO BE FREE DRAINING AND PLACED AND COMPACTED IN ACCORDANCE WITH THE SPECIFICATION FOR HIGHWAYS WORKS. SUITABLE FILL IS HA CLASS 6N GRANULAR FILL. OTHER CLASSES OF BACKFILL CAN BE CONSIDERED FOR USE BEHIND THE WALL SUBJECT TO THE NECESSARY LABORATORY CLASSIFICATION AND STRENGTH TESTS AND WALL STABILITY DESIGN.

TIMBER

C5 TIMBER SHALL BE D30 MINIMUM STRENGTH CLASS HARDWOOD IN ACCORDANCE WITH BS EN 338.

C6 ALL WOOD COMPONENTS ARE TO BE PRE-APPROVED BY THE EMPLOYER'S REPRESENTATIVE FOR SOURCE AND TREATMENT.

C7 FOR GUIDANCE ONLY:
THE MAXIMUM LENGTH OF D30 GRADE TIMBER BOARDS (OR PILE SPACING) FOR A RETAINED HEIGHT OF 1.5m IS IN THE ORDER OF 1.5m FOR A BACKFILL WITH A CHARACTERISTIC PHI' VALUE OF 35°.

| Rev | Date | Description of revision | Design'd | C'kd |
|---|---|---|---|---|
| D | MAY 2011 | FOURTH ISSUE | RKA | AW |
| C | 21.04.11 | THIRD ISSUE. FORM B. | RKA | AW |
| B | 25.05.07 | SECOND ISSUE | GPR | NGAY |

Network Rail

Network Rail Infrastructure Ltd. Registered Office:
Kings Place, 90 York Way, London, N1 9AG

| | Name | Position | Signature | Date |
|---|---|---|---|---|
| Approved | P CLARK | Senior Prog. Eng. Manager Investment Projects Building & Civils | PC | MAY 2011 |

Master copy with original signatures held by Network Rail HQ
CIVIL ENGINEERING STANDARD DESIGN

© COPYRIGHT NETWORK RAIL 2010

# CESS SUPPORT STRUCTURES

# UNANCHORED KINGPOST WALL

Scale: AS SHOWN

Drawing Number: NR/CIV/SD/263 REV. D

Full document details: NR NR-CIV-SD-263 ISSUE D 2011
Documents
Document Sharing Hub
Licensee:nilesh.vittoria@ricardo.com, User:sam.elliott
Copyright Network Rail
Provided by IHS under licence with Network Rail
No reproduction or networking permitted without licence from IHS