Supplementary Information

The following information is associated with Network Rail Standard:
NR CIV/SD/280 Rev C

Additional Content Access

Click the link below to access CAD version of this drawing.

CAD Drawing

- CIV/SD/280

If you have any questions, or need assistance, please contact **IHS Support**

Information accessed via the links above is the property of the Copyright holder

IHS Additional Content Page

--`,,,,,,`,,,,,,`,,`,,,,,,,,`-`-`,,`,,`,`,,`---

Documents
Document Sharing Hub

Copyright Network Rail
Provided by IHS under license with Network Rail
No reproduction or networking permitted without license from IHS
Full document details: NR NR-CIV-SD-280 ISSUE C 2011

Licensee=Weston Williamson/5989497001, User=sam, albett
Not for Resale, 03/27/2016 20:53:11 MDT

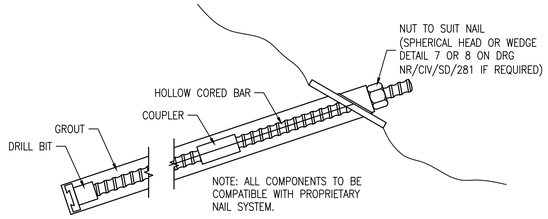

SN1 – PROPRIETARY SELF DRILLING SOIL NAIL

(TYPICALLY USED IN POOR GROUND)

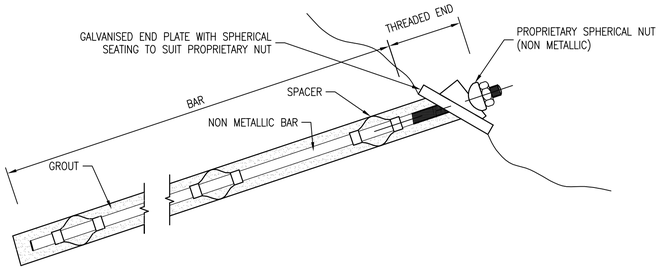

SN2 – PROPRIETARY NON–METALLIC SOIL NAIL

(TYPICALLY USED IN AGGRESSIVE SOILS)

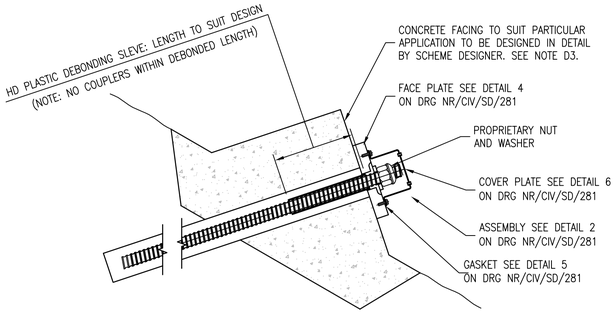

SN3 – PRESTRESSED "ACTIVE" SOIL NAIL

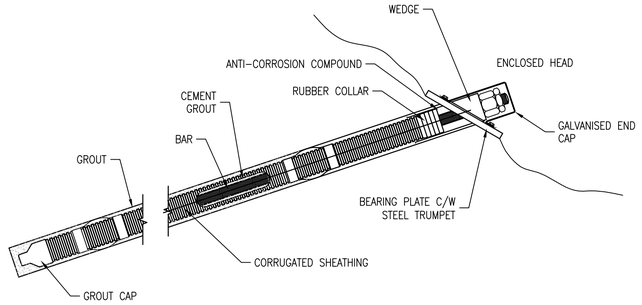

SN4 – PROPRIETARY DOUBLE PROTECTED SOIL NAIL

(TYPICALLY USED IN AGGRESSIVE SOILS)

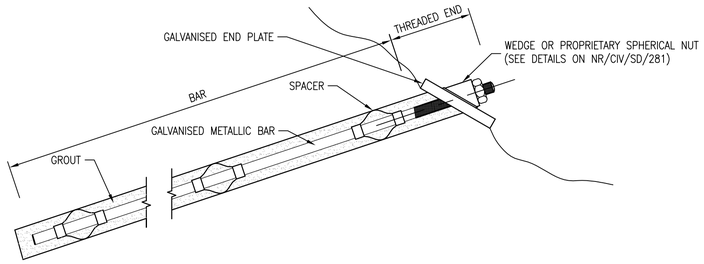

SN5 – STANDARD SOIL NAIL

(TYPICALLY USED IN GOOD GROUND CONDITIONS, WHICH ARE NON AGRESSIVE)

TABLE 1

SAFETY, HEALTH & ENVIRONMENT RISK ASSESSMENT

DESIGNERS' NOTE – CDM REG. 13(2)

THE FOLLOWING ARE SIGNIFICANT HAZARDS WHICH MIGHT AFFECT THE HEALTH AND SAFETY OF THOSE UNDERTAKING THE WORKS OUTLINED IN THIS SET OF DRAWINGS ON RAILWAY STRUCTURES OR THOSE AFFECTED BY THESE ACTIVITIES. A SITE SPECIFIC RISK ASSESSMENT SHALL ALWAYS BE UNDERTAKEN PRIOR TO COMMENCING ANY OF THE WORKS DESCRIBED ON SITE.

IT IS ASSUMED THAT A COMPETENT CONTRACTOR IS AWARE OF THE RISKS ASSOCIATED WITH GENERAL CONSTRUCTION ACTIVITIES UNDERTAKEN IN THE RAILWAY ENVIRONMENT.

HAZARD	STAGE	MITIGATING MEASURES
WORKING ON POTENTIALLY UNSTABLE SLOPE.	D/C	DESIGNER TO IDENTIFY AREAS OF INSTABILITY FOR THE PARTICULAR SCHEME
EXCESSIVE DEFLECTION OF NAIL PENETRATING TRACK FORMATION	D/C	CONTRACTOR TO CLOSELY MONITOR FORMATION DURING NAIL INSTALLATION IN THE UPPER PARTS OF AN EMBANKMENT. APPROPRIATE BAR STIFFNESS TO BE SELECTED.
INSTALLATION OF NAIL – MANUAL HANDLING/PROXIMITY TO LIVE WIRE	D/C	USE SHORT LENGTHS OF NAIL WITH COUPLER WHERE POSSIBLE. CONSIDER NON–METALLIC NAILS
GROUTING – EXCESS GROUT ENTERING WATERCOURSES ETC.	D/C	CONTRACTOR TO CONTROL GROUTING PROCESS ESPECIALLY IF PRESSURE GROUTING IS ANTICIPATED
ENVIRONMENTAL RISK: PROTECTED SPECIES ON SITE PROHIBITING SITE ACCESS E.G BADGERS, BATS, PLANTS	D/C	UNDERTAKE AN ENVIRONMENTAL WALKOVER SURVEY TO ESTABLISH ECOLOGICAL CONSTRAINTS.
REMOVAL OF TREES AND VEGETATION DURING NESTING SEASON	C	CHECK WITH ENVIRONMENTAL EXPERT AS TO WHETHER TREES CAN BE REMOVED.
CONTAMINATED LAND	D/C	SITE INVESTIGATION TO CHECK FOR CONTAMINATION. CONTRACTOR TO INVESIGATE SUITABLE CONTROL ON SITE.
ADVERSE EFFECT ON TRACK QUALITY DUE TO EXCAVATIONS.	C/O	TRACK TO BE MONITORED DURING INSTALLATION AND FOLLOWING INSTALLATION, TO CHECK LIMITS, DO NOT EXCEED THOSE DEFINED IN LETTER OF INSTRUCTION AGREED WITH ROUTE ASSET MANAGER (TRACK)
STRESSING OF SOIL NAILS	C/O	STRESSING TO BE DEFINED IN THE PROJECT SPECIFICATION AND ON AGREED WORK PACKAGE PLAN. WHERE POSSIBLE STRESSING TO BE COMPLETED WHEN TRAIN MOVEMENTS ARE MINIMAL.

NOTE : C=CONSTRUCTION, D=DESIGN, O=OPERATION

F4 IF THE VOLUME OF GROUT INJECTED EXCEEDS THREE TIMES THE NOMINAL VOLUME OF THE DRILL HOLE, THE CONTRACTOR SHALL ESTABLISH THE REASON FOR THE EXCESSIVE GROUT AND SHALL SUBMIT TO THE SCHEME DESIGNER FOR APPROVAL THE CORRECTIVE MEASURES THAT THEY PROPOSE TO TAKE.

G RESIN

G1 ALTERNATIVE GROUTS, INCLUDING EPOXY RESIN MAY BE SPECIFIED BY THE SCHEME DESIGNER WHERE APPROPRIATE

G2 ALL INSTALLATION WORKS SHALL BE IN ACCORDANCE WITH THE RESIN MANUFACTURER'S INSTRUCTION.

G3 RESIN SHALL BE STORED AS PER THE MANUFACTURER'S INSTRUCTIONS. THE EXPIRY DATE OF ALL RESINS SHOULD BE CLEARLY INDICATED AND THE DATES SHALL BE SUPPLIED TO THE SCHEME DESIGNER PRIOR TO INSTALLATION. MANUFACTURERS' TEST CERTIFICATES SHALL BE SUPPLIED TO THE SCHEME DESIGNER FOR EACH BATCH OF RESIN USED.

H CONCRETE

H1 CONCRETE FOR PACKING SHALL BE GRADE ST3 IN ACCORDANCE WITH BS EN 206–1 AND NETWORK RAIL SPECIFICATION NR/L3/CIV/140/85.

H2 CONCRETE FOR FACINGS SHALL BE SPECIFIED BY THE SCHEME DESIGNER.

I TESTING

I1 TESTING OF NAILS SHALL INCLUDE CONSIDERATION OF:
- FACE STABILITY
- MATERIALS TESTING
- SOIL NAIL LOAD TESTS
- SACRIFICIAL NAIL TEST
- PRODUCTION NAIL TEST

I2 REFERENCE SHALL BE MADE TO CIRIA GUIDE 637 (SECTION 11.3) AND BS EN 14490 (SECTION 9.3) UNLESS OTHERWISE SPECIFIED BY THE SCHEME DESIGNER 3% OF ALL PRODUCTION NAILS SHALL BE SUBJECT TO PRODUCTION NAIL TESTING.

I3 SACRIFICIAL NAIL TESTS SHALL BE SPECIFIED BY THE SCHEME DESIGNER IN ACCORDANCE WITH BS EN 14490.

J INSTALLATION

J1 SOIL NAILS SHALL NOT BE INSTALLED USING WATER FLUSH UNLESS CONSIDERED ACCEPTABLE BY NETWORK RAIL. AIR MIST OR FOAM FLUSHES ARE ACCEPTABLE SUBJECT TO GROUND CONDITIONS AND RISK ASSESSMENT.

J2 THREADED BAR SOIL NAILS SHALL BE INSTALLED WITH A NOMINAL BEDDING DOWN TORQUE. NOMINAL TORQUES FOR STANDARD DIAMETERS AND THREADS ARE AS FOLLOWS:
20mm 18 Nm
25mm 32 Nm
32mm 70 Nm

J3 PROPRIETARY NAILS SHALL BE TIGHTENED IN ACCORDANCE WITH THE MANUFACTURERS GUIDANCE.

J4 THE DESIGN MAY INCLUDE A GEOTEXTILE, GEOGRID OR STEEL MESH INSTALLED BETWEEN THE NAILS TO SPREAD THE LOAD AS NOTED IN NR/L3/CIV/071 CLAUSE 11.3. THE SCHEME DESIGNER SHALL INCORPORATE THESE DETAILS AS APPROPRIATE.

J5 THE CONTRACTOR SHALL COMPLY WITH NETWORK RAIL COMPANY PROCEDURES RELATING TO BURIED SERVICES; NR/L1/AMG/1010, NR/L2/AIF/1020 and NR/L2/AMG/1030.

K SLOPE PREPARATION

K1 PRIOR TO INSTALLATION THE SLOPE SURFACE SHALL BE PREPARED IN ACCORDANCE WITH THE MANUFACTURERS GUIDELINES AND CURRENT NETWORK RAIL STANDARDS.

K2 AS DEEMED APPROPRIATE THE FOLLOWING METHODS OF SITE CLEARANCE SHOULD BE UNDERTAKEN, SUPPORTED BY A DETAILED SPECIFICATION COVERING AS A MINIMUM THE EXTENT, LOCATION, DEGREE AND PURPOSE OF THE WORKS.

K2a VEGETATION REMOVAL
ALL WOODY VEGETATION REMOVED AT LEAST 2m BEYOND THE CREST, INCLUDING TREES, SHRUBS, PLANTS AND FALLEN MATTER, CUT BACK AS CLOSE TO GROUND LEVEL AS PRACTICALLY POSSIBLE. ALL ROOTS, STUMPS AND CUT ENDS SHALL BE TREATED TO PREVENT REGROWTH.

K2b SCALING
LOOSE OR UNSTABLE ROCK OR SOIL SHALL BE REMOVED. SMALL SIZED BLOCKS MAY BE REMOVED BY HAND OR NON–POWERED HAND HELD TOOLS. LARGER MASSES MAY REQUIRE POWER TOOLS, LOW ENERGY BLASTING, EXPANDING GROUT OR STITCH DRILLING. ALL SCALING WORK MUST BE CARRIED OUT IN A SAFE AND CONTROLLED MANNER. WHERE NECESSARY LARGER MASSES MAY BE BROKEN UP IN–SITU TO FACILITATE SAFE REMOVAL. THE CONTRACTOR SHALL PROVIDE A WORK PACKAGE PLAN WHICH SHALL BE SUBMITTED TO THE SCHEME DESIGNER FOR APPROVAL PRIOR TO COMMENCEMENT OF THE WORK.

L REPORTING

L1 THE CONTRACTOR SHALL KEEP FULL RECORDS OF ALL MATERIALS USED, INCLUDING THE BAR, FACE PLATES, WASHERS AND NUTS AND THE TYPE AND QUALITY OF EACH RESIN/GROUT USED. MANUFACTURER'S TEST AND CONFORMITY CERTIFICATES SHALL BE SUPPLIED TO THE SCHEME DESIGNER.

L2 THE CONTRACTOR SHALL PROVIDE AS BUILT PHOTOGRAPHS OR DRAWINGS SHOWING THE LOCATION AND WHERE SPECIFIED THE UNIQUE IDENTIFICATION NUMBER OF EACH SOIL NAIL.

C2 TECHNICAL APPROVAL OF THE USE OF THE SDD TO BE IN ACCORDANCE WITH NR/L3/CIV/151.

C3 IF REQUIRED THE FACE PLATE FOR EACH SOIL NAIL IS TO BE MARKED WITH AN UNIQUE IDENTIFICATION NUMBER. USE BLUE EPOXY BASED PAINT FOR GALVANISED STEEL OR STAMP ON A STAINLESS STEEL PLATE.

C4 CONTRACTOR ALTERNATIVE DESIGNS SHALL ADHERE TO METHODS SET OUT IN HA 68/94 OR BS EN 14490 AND ARE SUBJECT TO TECHNICAL APPROVAL IN ACCORDANCE WITH NR/SP/CIV/003.

D SOIL NAILS

D1 SOIL NAILS SHALL BE ONE OF THE FOLLOWING TYPES:
- PROPRIETARY HOLLOW SELF DRILLING BAR (SN1)
- PROPRIETARY NON–METALLIC (SN2)
- ACTIVE' PRE–STRESSED (SN3)
- PROPRIETARY DOUBLE PROTECTED (SN4)
- HIGH YIELD THREADED BAR (SN5)

D2 THE REQUIREMENT FOR PROTECTIVE COATING SHALL BE DETERMINED BY THE SCHEME DESIGNER. REFERENCE CAN BE MADE TO SECTION 9 OF CIRIA GUIDE C637 AND ANNEX B OF BS EN 14490:2010.

D3 TYPE SN3 SOIL NAILS MAY BE FORMED FROM ANY OF THE OTHER SOIL NAIL TYPES (SN1, SN2, SN4 OR SN5) BUT ARE PRE–STRESSED TO GENERATE AN ACTIVE PRESSURE ONTO THE GROUND. WHERE THESE ARE USED THE SCHEME DESIGNER SHALL DETAIL THE APPROPRIATE REACTION MEDIUM WHICH IS ASSUMED TO BE CONCRETE IN THESE DETAILS.

D4 SOIL NAILS MAY BE GALVANISED STEEL THREADED BARS WITH A MINIMUM STRENGTH GRADE OF 500 N/mm^2 IN ACCORDANCE WITH BS4449. THE BARS SHALL BE HOT DIPPED GALVANISED ACCORDING WITH BS EN ISO 1461 AND NR/GN/CIV/002 TO PROVIDE THE REQUIRED CORROSION PROTECTION. (A STANDARD MEAN COATING THICKNESS OF 86μm IS REQUIRED BUT IN AGGRESSIVE GROUND THIS SHOULD BE INCREASED TO 140μm.)

D5 ALTERNATIVE PROPRIETARY CORROSION COATINGS MAY BE USED BUT SHALL HAVE AN AGRÉMENT BOARD ROAD AND BRIDGES CERTIFICATE OR OTHER EUROPEAN APPROVED CERTIFICATION CONSISTENT WITH THE INTENDED APPLICATION.

D6 STAINLESS STEEL NAILS SHALL BE MINIMUM 316 GRADE HIGH YIELD STAINLESS STEEL OR EQUIVALENT.

D7 PROPRIETARY SOIL NAILS SHALL BE INSTALLED FULLY IN ACCORDANCE WITH THE MANUFACTURER'S INSTRUCTIONS AND GUIDELINES AND HAVE AN AGRÉMENT BOARD ROAD AND BRIDGES CERTIFICATE OR OTHER EQUIVALENT EUROPEAN APPROVAL CERTIFICATION REGISTERED WITH THE DEPARTMENT OF TRANSPORT.

D8 CORRUGATED PLASTIC SHEATHING SHALL BE USED WHEN REQUIRED TO PROTECT THE SOIL NAILS. MINIMUM 20mm GROUT COVER BETWEEN SHEATH AND NAIL/SHEATH AND SOIL (NR/L3/CIV/140/52).

D9 CENTRALISERS SHALL BE SPACED AT <2m CENTRES ALONG THE LENGTH OF THE NAIL WITH THE CENTRALISER INSTALLED 0.3m FROM THE END OF THE NAIL. A MINIMUM OF 3 CENTRALISERS SHALL BE PROVIDED.

D10 CENTRALISERS SHALL PERMIT FREE GROUT FLOW AS SPECIFIED IN NR/L3/CIV/140/52.

E PLATES AND FITTINGS

E1 ALL NUTS PLATES COUPLERS ETC SHALL BE FULLY COMPATIBLE WITH THE SOIL NAIL IN TERMS OF GEOMETRIC CONFIGURATION TO PERMIT THE UNIFORM TRANSFER OF LOAD FROM THE PLATE TO THE SOIL.

E2 UNLESS OTHERWISE SPECIFIED BY THE SCHEME DESIGNER THE STEEL GRADE FOR FACE PLATES AND ASSOCIATED FITTINGS SHALL BE GRADE S275NL IN ACCORDANCE WITH BS EN 10025 PART 3.

E3 GALVANISED FACE PLATES AND FITTINGS SHALL BE HOT DIP GALVANISED TO BS EN ISO 1461 TO ACHIEVE A THICKNESS OF 86μm. NUTS AND WASHERS SHALL BE HOT DIP GALVANISED TO BS EN ISO 1461 (TABLE–3 OR TABLE–4) TO ACHIEVE A THICKNESS OF 55μm.

E4 WHERE STAINLESS STEEL SOIL NAILS ARE USED, THE SCHEME DESIGNER SHALL EITHER SPECIFY STAINLESS STEEL FACE PLATES AND FITTINGS OR DETAIL APPROPRIATE ISOLATION WASHERS BETWEEN STAINLESS AND NON–STAINLESS STEEL TO PREVENT BI–METALLIC CORROSION.

F GROUTS

F1 SOIL NAILS SHALL BE GROUTED IN ACCORDANCE WITH BS EN 14490:2010 AND IN LINE WITH GUIDANCE FROM CIRIA C637.

F2 GROUTING PROCEDURES SHALL INCLUDE:
- METHOD OF PLACEMENT TO GIVE UNCONTAMINATED GROUT ADEQUATE COVER AND PREVENT AIR VOIDS.
- PRESSURE GROUTING/POST GROUTING PROCEDURES
- PHASING OF GROUTING, GROUTING PRESSURES TO GIVE ADEQUATE BOND, AVOID GROUND HEAVE AND REDUCE OVER BREAK/GROUT WASTAGE

F3 CEMENTITIOUS GROUTS SHALL HAVE A MINIMUM COMPRESSIVE STRENGTH OF $30N/mm^2$ (28 DAYS). WATER/CEMENT RATIO SHALL NOT EXCEED 0.45 IN ACCORDANCE WITH NR/L3/CIV/140/52_011. GROUT CUBE SAMPLES (3No) ARE TO BE TAKEN AND TESTED FOR EVERY 10th SOIL NAIL INSTALLATION IN ACCORDANCE WITH BS 1881.

DRAWING No. NR/CIV/SD/280

NOTES

A DEFINITIONS

A1 SOIL NAIL – A REINFORCING ELEMENT INSTALLED INTO THE GROUND, USUALLY AT A SUB–HORIZONTAL ANGLE, THAT MOBILISES RESISTANCE WITH THE SOIL ALONG ITS ENTIRE LENGTH.

A2 GOOD GROUND – GROUND THAT IS SELF SUPPORTING ALLOWING OPEN HOLE BORING TECHNIQUES FOR NAIL INSTALLATION.

A3 POOR GROUND – GROUND THAT IS NOT SELF SUPPORTING REQUIRING SUPPORT OF THE BORING DURING NAIL INSTALLATION.

A4 AGGRESSIVE SOIL – SOIL OR GROUNDWATER LIKELY TO LEAD TO UNACCEPTABLE LOSS OF SECTION DURING THE DESIGN LIFE OF THE WORKS.

A5 NON–AGGRESSIVE SOIL – SOIL OR GROUNDWATER THAT WILL NOT LEAD TO UNACCEPTABLE LOSS OF SECTION DURING THE DESIGN LIFE OF THE WORKS.

B DESIGN

B1 SOIL NAILS SHALL BE DESIGNED IN ACCORDANCE WITH THE REQUIREMENTS OF CURRENT NETWORK RAIL STANDARDS, NR/L3/CIV/071 AND BS EN 14490:2010.

B2 GEOTECHNICAL INVESTIGATION SHALL FULFIL THE REQUIREMENTS SPECIFIED IN BS EN 14490:2010 AND EN 1997–1.

B3 THE SCHEME DESIGNER IS RESPONSIBLE FOR THE DESIGN AND USE OF SOIL NAILS AND ALL THEIR COMPONENTS.

B4 THE DETAILS SHOWN ON THIS DRAWING SHOW A NUMBER OF OPTIONS FOR THE PROVISION OF SOIL NAILS. THE SCHEME DESIGNER SHALL DETERMINE THE MOST APPROPRIATE OPTION TO SUIT THE GROUND CONDITIONS AND SITE CONSTRAINTS.

B5 THE SCHEME DESIGNER SHALL REFER TO CURRENT BEST PRACTICE FOR THE DESIGN AND USE OF SOIL NAILS. REFERENCE SHALL BE MADE TO CIRIA GUIDE C637 "SOIL NAILING – BEST PRACTICE GUIDANCE".

B6 WHERE LATERAL CLEARANCES ARE TO BE REDUCED THESE SHALL BE AGREED WITH THE GAUGING ENGINEER.

B7 THE SCHEME DESIGNER SHALL GIVE APPROPRIATE CONSIDERATION TO THE REQUIREMENTS OF STRAY CURRENT PROTECTION. REFER TO NR/L3/CIV/071 CLAUSE 10.2.

B8 DESIGN LIFE TO BE 60 YEARS

C SPECIFICATION

C1 THE SCHEME DESIGNER SHALL PREPARE A PARTICULAR SPECIFICATION FOR THE WORKS TO DEFINE THE DETAILED REQUIREMENTS FOR THE PROJECT WHICH CONFORMS TO NR/L3/CIV/140/52_011. AS A MINIMUM COVERING;
- LOCATION, TYPE, INCLINATION AND AZIMUTH
- FREE FIXED AND TOTAL LENGTH BAR DIAMETER, STRENGTH AND CORROSION PROTECTION
- WORKING LOAD AND PRE–STRESS
- FACE PLATE AND CONNECTION DETAILS
- GROUT TYPE AND CHARACTERISTICS
- BOREHOLE DIAMETER
- INSTALLATION
- TESTING REQUIREMENTS

Rev	Date	Description of revision	Design'd	C'kd
C	MAY 2011	THIRD ISSUE	GPR	SWMF
B	19.03.08	SECOND ISSUE	NGAY	NGAY
A	08.08.06	FIRST ISSUE	NGAY	NGAY

Network Rail

Network Rail Infrastructure Ltd. Registered Office: Kings Place, 90 York Way, London, N1 9AG

Approved	P CLARK	Senior Prog. Eng. Manager Investment Projects Building & Civils	PC	MAY 2011
	Name	Position	Signature	Date

Master copy with original signatures held by Network Rail HQ CIVIL ENGINEERING STANDARD DESIGN

© COPYRIGHT NETWORK RAIL 2011

EARTHWORKS

SOIL NAILS

Scale AS SHOWN

Drawing Number NR/CIV/SD/280 REV. C

Full document details: NR NR-CIV-SD-280 ISSUE C 2011
Documents Document Sharing Hub
Copyright Network Rail Provided by IHS under license with Network Rail No reproduction or networking permitted without license from IHS
Licensee=Halcrow Willbros JV/5935410/001, User=sam, allan 2011-05-31 07:00:00 Mon, Single User, Non-commercial use only