Supplementary Information

The following information is associated with Network Rail Standard:
NR CIV/SD/281 Rev A

Additional Content Access

Click the link below to access CAD version of this drawing.

CAD Drawing

- CIV/SD/281

If you have any questions, or need assistance, please contact **IHS Support**

Information accessed via the links above is the property of the Copyright holder

IHS Additional Content Page

Documents
Document Sharing Hub

Copyright Network Rail
Provided by IHS under license with Network Rail
No reproduction or networking permitted without license from IHS
Full document details: NR NR-CIV-SD-281 ISSUE A 2011

Licensee=Weston Williamson/5989497001, User=sam, albett
Not for Resale, 03/27/2016 20:53:16 MDT

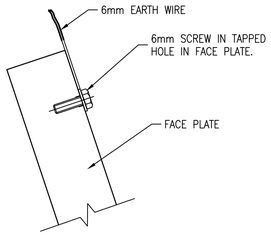

DETAIL 1
EARTH BONDING DETAIL

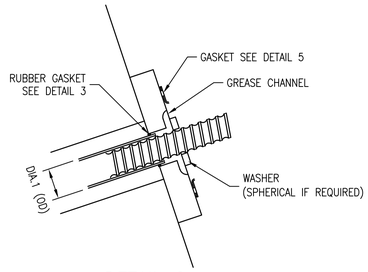

DETAIL 2
ASSEMBLY DETAIL
FOR ACTIVE SOIL NAIL

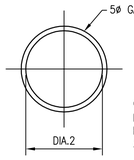

GASKET TO BE SUITABLE TO FIT DIAMETER "DIA.2" TIGHTLY AROUND PLASTIC SLEEVE AND SEAL AGAINST ANCHOR PLATE DIA.2=DIA.1−2mm

DETAIL 3
RUBBER GASKET
FOR ACTIVE SOIL NAIL

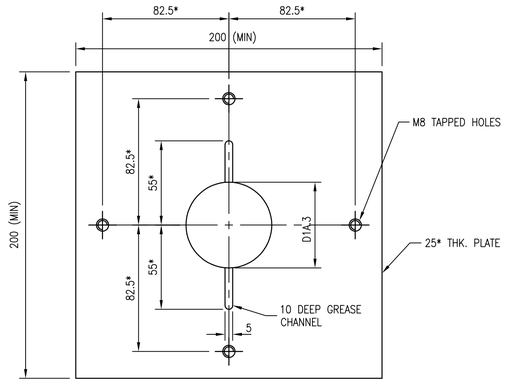

DIAMETER "DIA.3" TO SUIT NAIL DEBONDING SLEEVE AND GASKET DIA.3=DIA.1+6mm

DETAIL 4
TYPICAL FACE PLATE
FOR ACTIVE SOIL NAIL
(GALVANISED MILD STEEL)
NOTE: DIMENSIONS MAY BE ALTERED TO SUIT PARTICULAR DESIGN

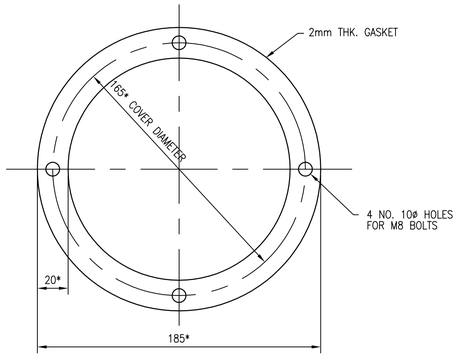

DETAIL 5
GASKET
FOR ACTIVE SOIL NAIL
GASKET TO BE MANUFACTURED FROM SUITABLE MATERIAL TO PROVIDE A GREASE RESISTANT SEAL TO THE COVER PLATE

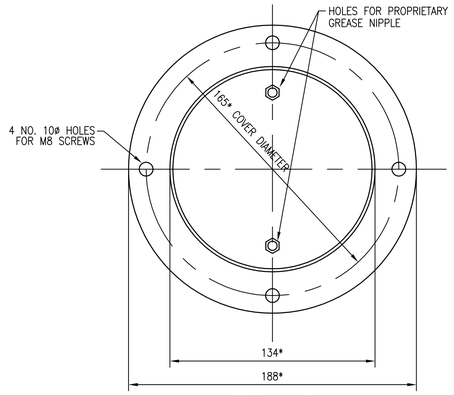

DETAIL 6
COVER PLATE
FOR ACTIVE SOIL NAIL
(GALVANISED MILD STEEL)
HEIGHT OF COVER PLATE TO TO SUIT SELECTED NAIL TYPE, NUT AND WASHER

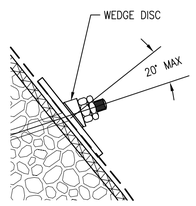

DEATIL 7
WEDGE HEAD DETAIL

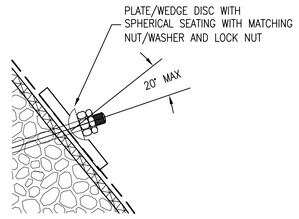

DEATIL 8
SPHERICAL HEAD DETAIL

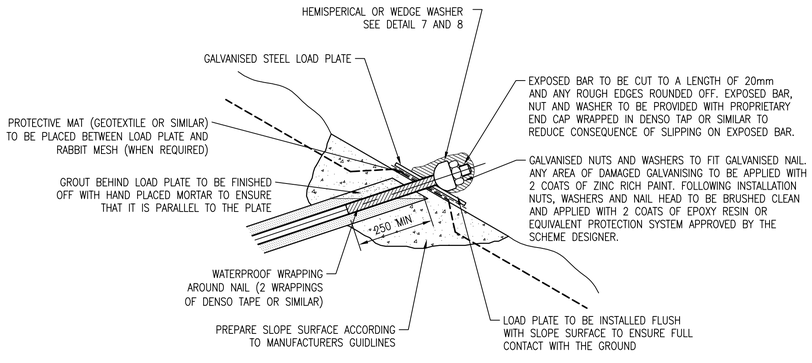

DEATIL 9
TYPICAL HEAD DETAIL FOR
EMBANKMENT / LOW SLOPE PROFILE

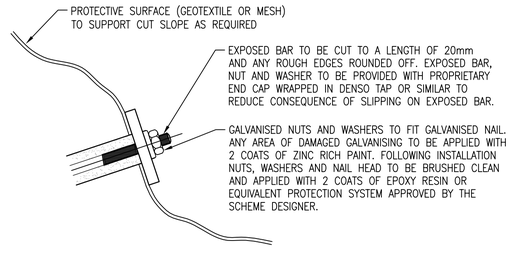

DETAIL 10
TYPICAL CUTTING HEAD DETAIL FOR
STEEP SLOPE PROFILE

DRAWING No. NR/CIV/SD/281

NOTES

1. FOR ALL NOTES REFER TO DRAWING NR/CIV/SD/280.
2. ALL DIMENSIONS ARE IN MILLIMETRES UNLESS OTHERWISE STATED.
3. DIMENSIONS SHOWN * ARE FOR GUIDANCE AND WILL SUIT NAIL DIAMETERS UP TO 40mm. THESE MAY BE REDUCED FOR SMALLER DIAMETER NAILS.
4. DETAILS SHOWN ARE FOR GUIDANCE. OTHER SYSTEMS MAY BE SPECIFIED BY THE SCHEME DESIGNER TO MEET THE REQUIREMENTS OF THE PROJECT.

Rev	Date	Description of revision	Design'd	C'kd
A	MAY 2011	FIRST ISSUE	GPR	SWMF

Network Rail

Network Rail Infrastructure Ltd. Registered Office: Kings Place, 90 York Way, London, N1 9AG

Approved	P CLARK	Senior Prog. Eng. Manager Investment Projects Building & Civils	PC	MAY 2011
	Name	Position	Signature	Date

Master copy with original signatures held by Network Rail HQ CIVIL ENGINEERING STANDARD DESIGN

© COPYRIGHT NETWORK RAIL 2011

EARTHWORKS

SOIL NAILS
TYPICAL DETAILS

Scale	AS SHOWN	
Drawing Number	NR/CIV/SD/281	REV. A

Full document details: NR NR-CIV-SD-281ISSUE A 2011
Documents Document Sharing Hub
Copyright Network Rail
Provided by IHS under licences with Network Rail
No reproduction or distribution without prior permission from IHS
Licensee=Halcrow Williams/5999100, User=sam, allan
2011-05-11 09:00:00 +0100