Supplementary Information

The following information is associated with Network Rail Standard:
NR CIV/SD/285 Rev B

Additional Content Access

Click the link below to access CAD version of this drawing.

CAD Drawing

- CIV/SD/285

If you have any questions, or need assistance, please contact **IHS Support**

Information accessed via the links above is the property of the Copyright holder

IHS Additional Content Page

Documents
Document Sharing Hub

Copyright Network Rail
Provided by IHS under license with Network Rail
No reproduction or networking permitted without license from IHS
Full document details: NR NR-CIV-SD-285 ISSUE B 2011

Licensee=Weston Williamson/5989497001, User=sam, albett
Not for Resale, 03/27/2016 20:51:30 MDT

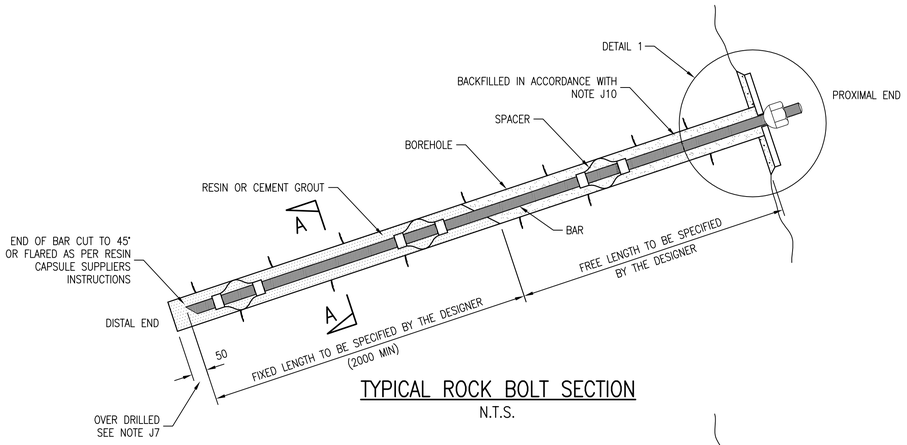

TYPICAL ROCK BOLT SECTION
N.T.S.

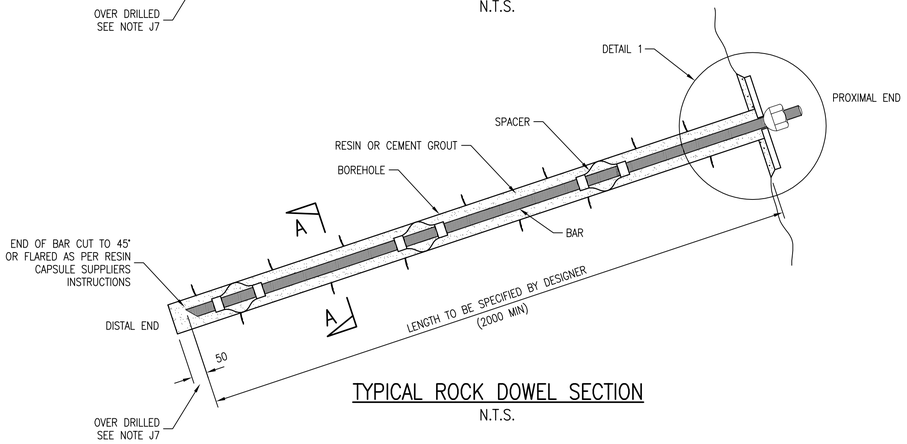

TYPICAL ROCK DOWEL SECTION
N.T.S.

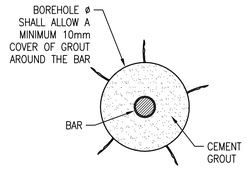

SECTION A–A
CEMENT GROUT DETAIL

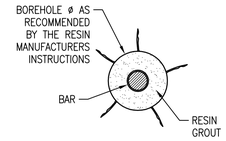

SECTION A–A
RESIN GROUT DETAIL

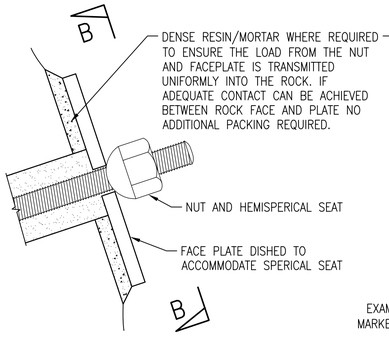

DETAIL 1
N.T.S.

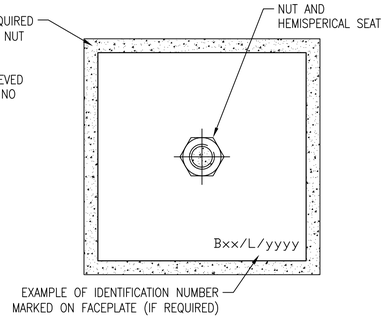

SECTION B–B
N.T.S.

TABLE 1

SAFETY, HEALTH & ENVIRONMENT RISK ASSESSMENT

DESIGNERS' NOTE – CDM REG. 13(2)

THE FOLLOWING ARE SIGNIFICANT HAZARDS WHICH MIGHT AFFECT THE HEALTH AND SAFETY OF THOSE UNDERTAKING THE WORKS OUTLINED IN THIS SET OF DRAWINGS ON RAILWAY STRUCTURES OR THOSE AFFECTED BY THESE ACTIVITIES. A SITE SPECIFIC RISK ASSESSMENT SHALL ALWAYS BE UNDERTAKEN PRIOR TO COMMENCING ANY OF THE WORKS DESCRIBED ON SITE.

IT IS ASSUMED THAT A COMPETENT CONTRACTOR IS AWARE OF THE RISKS ASSOCIATED WITH GENERAL CONSTRUCTION ACTIVITIES UNDERTAKEN IN THE RAILWAY ENVIRONMENT.

HAZARD	STAGE	MITIGATING MEASURES
HAND ARM VIBRATION	D/C	WORKS TO BE COMPLETED TO AN AGREED WORK PACKAGE PLAN OUTLINING ANTICIPATED EXPOSURE LEVELS AND MITIGATING ACTIONS IN ACCORDANCE WITH THE 'CONTROL OF VIBRATION AT WORK REGULATIONS'
WORKING ON OR BELOW POTENTIALLY UNSTABLE ROCK.	D/C	DESIGNER TO IDENTIFY AREAS OF INSTABILITY FOR THE PARTICULAR SCHEME
GENERATION OF DUST DURING DRILLING	C	CONSIDER AIR MIST FLUSH AND SUITABLE ON SITE DOUSING SYSTEMS
GROUTING – EXCESS GROUT ENTERING WATERCOURSES ETC.	C	CONTRACTOR TO CONTROL GROUTING PROCESS ESPECIALLY IF PRESSURE GROUTING IS ANTICIPATED
REMOVAL OF TREES AND VEGETATION DURING NESTING SEASON	C	CHECK WITH ENVIRONMENTAL EXPERT AS TO WHETHER TREES/VEGETATION CAN BE REMOVED.
BREACHING REQUIRED TRAIN CLEARANCES	D/C	WHERE CLEARANCES ARE LIMITED SCHEME DESIGNER TO CARRY OUT SURVEY OF PROPOSED POSITIONS PRIOR TO BOLT INSTALLATION AS BUILT POSITIONS TO BE SURVEYED AND CHECKED.
NOISE POLLUTION	C	WHERE POSSIBLE WORKS TO BE SCHEDULED TO MINIMISE NOISE IMPACT ON LOCAL RESIDENTS/WILDLIFE. WORKS TO BE COMPLETED IN ACCORDANCE WITH THE HSE CONTROL OF NOISE AT WORK REGULATION.
BOLT FAILURE DURING DESTRESSING	D/O/C	DESIGNER TO ENSURE ADEQUATE THREADED LENGTH IS PROVIDED BEYOND FACE PLATE/NUT ASSEMBLY TO ENABLE DESTRESSING OF BOLT.
UNSTABLE ROCK DUE TO TREE ROOT WEDGING	D/C	LOCATION ADJACENT TO TREE ROOTS TO BE CLOSELY EXAMINED BY ENGINEER AND ANY LOOSE MATERIAL REMOVED.
CONSTRUCTION RISKS DURING TESTING	D/C	TESTING REGIME TO BE DEFINED IN PROJECT SPECIFICATION AND AGREED WORK PACKAGE PLAN. WHERE POSSIBLE TESTING TO BE COMPLETED WHEN TRAIN MOVEMENTS ARE MINIMAL PARTICULARLY WHERE OVERSTRESSING IS REQUIRED. ONLY CERTIFICATED TEST RIGS AND JACKS TO BE USED.

NOTE : C=CONSTRUCTION, D=DESIGN, O=OPERATION

J9 IMMEDIATELY PRIOR TO THE INSTALLATION OF THE ROCK BOLT/DOWEL THE HOLE SHALL BE FLUSHED AND CLEANED OUT.

J10 THE FREE LENGTH OF THE BOLT SHALL BE ACHIEVED BY ONE OF THE FOLLOWING;
- FREE LENGTH GROUTED WITH PUMPABLE OR POURABLE RESIN OR GROUT ONCE TENSIONED.
- FAST AND SLOW SETTING RESIN CARTRIDGES OVER THE FIXED AND FREE LENGTH RESPECTIVELY.
- FREE LENGTH IS SLEEVED THROUGH THE GROUT OR RESIN. THE SLEEVE MUST BE FILLED WITH AN ANTI–CORROSION INHIBITING COMPOUND SEALING AIR EXCLUDING TAPE IN ACCORDANCE WITH BS8081.

K SLOPE PREPARATION

K1 PRIOR TO INSTALLATION THE SLOPE SURFACE SHALL BE PREPARED IN ACCORDANCE WITH THE MANUFACTURERS GUIDELINES AND CURRENT NETWORK RAIL STANDARDS.

K2 AS DEEMED APPROPRIATE THE FOLLOWING METHODS OF SITE CLEARANCE SHOULD BE UNDERTAKEN, SUPPORTED BY A DETAILED SPECIFICATION COVERING AS A MINIMUM THE EXTENT, LOCATION, DEGREE AND PURPOSE OF THE WORKS.

K2a VEGETATION REMOVAL
ALL WOODY VEGETATION REMOVED AT LEAST 2M BEYOND THE CREST, INCLUDING TREES, SHRUBS, PLANTS AND FALLEN MATTER, CUT BACK AS CLOSE TO GROUND LEVEL AS PRACTICALLY POSSIBLE. ALL ROOTS, STUMPS AND CUT ENDS SHALL BE TREATED TO PREVENT REGROWTH.

K2b SCALING
LOOSE OR UNSTABLE ROCK OR SOIL SHALL BE REMOVED. SMALL SIZED BLOCKS MAY BE REMOVED BY HAND OR NON–POWERED HAND HELD TOOLS. LARGER MASSES MAY REQUIRE POWER TOOLS, LOW ENERGY BLASTING, EXPANDING GROUT OR STITCH DRILLING. ALL SCALING WORK MUST BE CARRIED OUT IN A SAFE AND CONTROLLED MANNER. WHERE NECESSARY LARGER MASSES MAY BE BROKEN UP IN–SITU TO FACILITATE SAFE REMOVAL. THE CONTRACTOR SHALL PROVIDE A WORK PACKAGE PLAN WHICH SHALL BE SUBMITTED TO THE SCHEME DESIGNER FOR APPROVAL PRIOR TO COMMENCEMENT OF THE WORK.

L REPORTING

L1 THE CONTRACTOR SHALL KEEP FULL RECORDS OF ALL MATERIALS USED, INCLUDING THE BAR, FACE PLATES, WASHERS AND NUTS AND THE TYPE AND QUALITY OF EACH RESIN/GROUT USED. MANUFACTURER'S TEST AND CONFORMITY CERTIFICATES SHALL BE SUPPLIED TO THE SCHEME DESIGNER.

L2 THE CONTRACTOR SHALL PROVIDE AS BUILT PHOTOGRAPHS OR DRAWINGS SHOWING THE LOCATION AND WHERE SPECIFIED THE UNIQUE IDENTIFICATION NUMBER OF EACH ANCHORAGE.

F3 CEMENTITIOUS GROUTS SHALL HAVE A MINIMUM COMPRESSIVE STRENGTH OF 40N/mm² (28 DAYS). WATER/CEMENT RATIO SHALL NOT EXCEED 0.45 IN ACCORDANCE WITH NR/L3/CIV/140/52.011. GROUT CUBE SAMPLES (3NO) ARE TO BE TAKEN AND TESTED FOR EVERY 10TH ROCK BOLT/DOWEL INSTALLATION IN ACCORDANCE WITH BS 1881.

F4 IF THE VOLUME OF GROUT INJECTED EXCEEDS THREE TIMES THE NOMINAL VOLUME OF THE DRILL HOLE, THE CONTRACTOR SHALL ESTABLISH THE REASON FOR THE EXCESSIVE GROUT TAKE AND SHALL SUBMIT TO THE SCHEME DESIGNER FOR APPROVAL THE CORRECTIVE MEASURES THAT THEY PROPOSE TO TAKE.

G RESIN

G1 ALTERNATIVE GROUTS, INCLUDING EPOXY RESIN MAY BE SPECIFIED BY THE SCHEME DESIGNER WHERE APPROPRIATE.

G2 ALL INSTALLATION WORKS SHALL BE IN ACCORDANCE WITH THE RESIN MANUFACTURER'S INSTRUCTION.

G3 RESIN SHALL BE STORED AS PER THE MANUFACTURER'S INSTRUCTIONS. THE EXPIRY DATE OF ALL RESINS SHOULD BE CLEARLY INDICATED AND THE DATES SHALL BE SUPPLIED TO THE SCHEME DESIGNER PRIOR TO INSTALLATION. MANUFACTURER'S TEST CERTIFICATES SHALL BE SUPPLIED TO THE SCHEME DESIGNER FOR EACH BATCH OF RESIN USED.

H CONCRETE

H1 CONCRETE FOR PACKING SHALL BE GRADE ST3 IN ACCORDANCE WITH BS EN 206–1 AND NETWORK RAIL SPECIFICATION NR/L3/CIV/140/85.

I TESTING

I1 TESTING OF ROCK BOLTS/DOWELS SHALL INCLUDE CONSIDERATION OF:
1. FACE STABILITY
2. MATERIAL AND COMPONENTS TESTING
3. ROCK BOLT/DOWEL LOAD TESTS
   - PROVING TESTS
   - ONSITE SUITABILITY TESTS
   - ONSITE ACCEPTANCE TESTS

I2 THE SCHEME DESIGNER SHALL TAKE ACCOUNT OF BS EN 1537:2000 AND WHERE APPLICABLE BS8081:1989 (PART SUPERSEDED) (SECTION 11.1) GUIDANCE ON TESTING OF ROCK BOLTS. NORMALLY ALL ROCK BOLTS SHALL BE ACCEPTANCE TESTED EXCEPT WHEN INSTRUCTED OTHERWISE BY THE PARTICULAR SPECIFICATION FOR THE PROJECT.

I3 ROCK BOLTS WHICH MEET THE ACCEPTABILITY CRITERIA SHALL BE INCORPORATED INTO THE WORKS AS WORKING ROCK BOLTS.

I4 IF THE CRITERIA ARE NOT ACHIEVED THE CONTRACTOR SHALL INVESTIGATE THE CAUSE OF FAILURE. THE CONTRACTOR SHALL PROVIDE DETAILS OF THE COURSE OF ACTION THAT THEY PROPOSE TO ADOPT AND ANY MODIFICATIONS THEY CONSIDER ARE REQUIRED

I5 ROCK BOLTS WHICH DO NOT MEET THE ACCEPTABILITY CRITERIA SHALL BE ABANDONED AND REPLACED WITH NEW ROCK BOLTS WHICH SHALL BE TESTED. NOT LESS THAN 2 ADJACENT ROCK BOLTS, TO BE SPECIFIED BY THE SCHEME DESIGNER, SHALL THEN BE SUBJECTED TO ACCEPTANCE TESTING AND SO ON UNTIL; THE EXTENT OF THE PROBLEM IS FULLY DETERMINED.

I6 ROCK DOWELS ARE PASSIVE AND SHALL BE TESTED IN ACCORDANCE WITH THE PROCEDURES FOR ROCK BOLTS GIVEN ABOVE. 3% OF DOWELS SHALL BE TESTED UNLESS OTHERWISE SPECIFIED BY THE SCHEME DESIGNER.

J INSTALLATION GUIDANCE

J1 ALL DRILLING AND INSTALLATION OF ANCHORAGES SHALL BE UNDERTAKEN IN ACCORDANCE WITH BS 8081 SECTION 10.

J2 INSTALLATION OF ROCK BOLTS/DOWELS SHALL NOT USE WATER FLUSH UNLESS OTHERWISE AGREED BY NETWORK RAIL. AIR, AIR MIST OR FOAM FLUSHES ARE ACCEPTABLE SUBJECT TO GROUND CONDITIONS AND RISK ASSESSMENT.

J3 PROPRIETARY BOLTS/DOWELS SHALL BE INSTALLED FULLY IN ACCORDANCE WITH THE MANUFACTURERS INSTRUCTIONS AND GUIDELINES.

J4 PROPRIETARY BOLTS/DOWELS SHALL BE TIGHTENED IN ACCORDANCE WITH THE MANUFACTURERS GUIDANCE. LOAD INDICATING WASHER AND NUT SYSTEMS MAY BE INSTALLED WITH DUE CONSIDERATION TO ANY REDUCTION IN CLEARANCE THAT MAY RESULT.

J5 THE CONTRACTOR SHALL COMPLY WITH NETWORK RAIL COMPANY PROCEDURES RELATING TO BURIED SERVICES; NR/L1/AMG/1010, NR/L2/AIF/1020 AND NR/L2/AMG/1030.

J6 THE SCHEME DESIGNER SHALL SPECIFY THE LOCATIONS ON SCHEME DRAWINGS AND SCHEDULE, AND THE SCHEME DESIGNER SHALL AGREE THE LOCATIONS ON SITE PRIOR TO INSTALLATION.

J7 THE LENGTH OF THE BOREHOLE SHALL BE OVER DRILLED BY 50mm IN ORDER TO ACCOUNT FOR DETRITUS THAT CANNOT BE REMOVED

J8 ROCK BOLTS/DOWELS SHALL BE INSTALLED ON THE SAME DAY AS DRILLING OF THE BOREHOLE. IF FOR ANY REASON INSTALLATION IS DELAYED THE HOLE SHALL BE PROBED TO ASCERTAIN WHETHER COLLAPSE OF MATERIAL HAS OCCURRED WHICH WOULD PREVENT INSTALLATION TO THE FULL DEPTH OF THE HOLE. ANY SUCH DEBRIS SHALL BE REMOVED, OR A SUBSTITUTE HOLE MAY BE DRILLED AT AN AGREED LOCATION.

C SPECIFICATION

C1 TECHNICAL APPROVAL OF THE USE OF SDD TO BE IN ACCORDANCE WITH NR/L3/CIV/151.

C2 THE SCHEME DESIGNER SHALL PREPARE A PARTICULAR SPECIFICATION FOR THE WORKS TO DEFINE THE DETAILED REQUIREMENTS FOR THE PROJECT WHICH CONFORMS TO NR/L3/CIV/140/52.011 AS A MINIMUM COVERING;
- LOCATION, TYPE, INCLINATION, AND AZIMUTH
- TOTAL LENGTH (AND FIXED/FREE LENGTH)
- BAR DIAMETER, STRENGTH AND CORROSION PROTECTION
- WORKING LOAD (AND PRE–STRESS)
- FACE PLATE AND CONNECTION DETAILS
- GROUT TYPE(S) AND CHARACTERISTICS
- BOREHOLE DIAMETER
- INSTALLATION
- TESTING REQUIREMENTS

C3 IF REQUIRED FACE PLATE OF EACH ANCHORAGE TO BE MARKED WITH AN UNIQUE IDENTIFICATION NUMBER. USE BLUE EPOXY BASED PAINT FOR GALVANISED STEEL OR STAMP ON A STAINLESS STEEL PLATE.

D ROCK BOLTS/DOWELS

D1 STANDARD ROCK BOLTS SHALL BE ONE OF THE FOLLOWING TYPES:
- HIGH YIELD GALVANISED THREADED BAR (RB1)
- PROPRIETARY NON–METALLIC (RB2)
- PROPRIETARY HOLLOW BAR SELF DRILLING (RB3)
- HIGH YIELD STAINLESS STEEL (RB4)

D2 STANDARD ROCK DOWELS SHALL BE ONE OF THE FOLLOWING TYPES:
- HIGH YIELD GALVANISED THREADED BAR (RD1)
- PROPRIETARY NON–METALLIC (RD2)
- PROPRIETARY HOLLOW BAR SELF DRILLING (RD3)
- HIGH YIELD STAINLESS STEEL (RD4)

D3 THE REQUIREMENT FOR PROTECTIVE COATING SHALL BE DETERMINED BY THE SCHEME DESIGNER IN ACCORDANCE WITH BS EN 1537.

D4 ROCK BOLTS/DOWELS MAY BE GALVANISED STEEL THREADED BARS WITH A MINIMUM STRENGTH GRADE OF 500 N/mm² IN ACCORDANCE WITH BS4449. THE BARS SHALL BE HOT DIPPED GALVANISED ACCORDING WITH BS EN ISO 1461 AND NR/GN/CIV/002 TO PROVIDE THE REQUIRED CORROSION PROTECTION. (A STANDARD MEAN COATING THICKNESS OF 86µm IS REQUIRED BUT IN AGGRESSIVE GROUND THIS SHOULD BE INCREASED TO 140µm).

D5 ALTERNATIVE PROPRIETARY CORROSION COATINGS MAY BE USED BUT SHALL HAVE AN AGRÉMENT BOARD ROAD AND BRIDGES CERTIFICATE OR OTHER EUROPEAN APPROVED CERTIFICATION CONSISTENT WITH THE INTENDED APPLICATION.

D6 STAINLESS STEEL BARS SHALL BE MINIMUM 316 GRADE HIGH YIELD STAINLESS STEEL OR EQUIVALENT.

D7 PROPRIETARY ROCK BOLTS/DOWELS SHALL BE INSTALLED FULLY IN ACCORDANCE WITH THE MANUFACTURER'S INSTRUCTIONS AND GUIDELINES AND HAVE AN AGRÉMENT BOARD ROAD AND BRIDGES CERTIFICATE OR OTHER EQUIVALENT EUROPEAN APPROVAL CERTIFICATION REGISTERED WITH THE DEPARTMENT OF TRANSPORT.

D8 CENTRALISERS SHALL BE SPACED EVENLY ALONG THE LENGTH OF THE BAR AT <2m CENTRES AND 0.3m FROM THE END OF THE BAR. A MINIMUM OF THREE CENTRALISERS SHALL BE PROVIDED.

D9 CENTRALISERS SHALL PERMIT FREE GROUT FLOW AS SPECIFIED IN NR/L3/CIV/140/52.

E STEEL PLATES AND FITTINGS

E1 ALL NUTS PLATES COUPLERS ETC SHALL BE FULLY COMPATIBLE WITH THE ROCK BOLT/DOWEL IN TERMS OF GEOMETRIC CONFIGURATION TO PERMIT THE UNIFORM TRANSFER OF LOAD FROM THE PLATE TO THE ROCK.

E2 UNLESS OTHERWISE SPECIFIED BY THE SCHEME DESIGNER THE STEEL GRADE FOR FACE PLATES AND ASSOCIATED FITTINGS SHALL BE GRADE S275NL IN ACCORDANCE WITH BS EN 10025 PART 3.

E3 GALVANISED FACE PLATES AND FITTINGS SHALL BE HOT DIP GALVANISED TO BS EN ISO 1461 TO ACHIEVE A THICKNESS OF 86µm. NUTS AND WASHERS SHALL BE HOT DIP GALVANISED TO BS EN ISO 1461 (TABLE–3 OR TABLE–4) TO ACHIEVE A THICKNESS OF 55µm.

E4 WHERE STAINLESS STEEL BARS ARE USED, THE SCHEME DESIGNER SHALL EITHER SPECIFY STAINLESS STEEL FACE PLATES AND FITTINGS OR DETAIL APPROPRIATE ISOLATION WASHERS BETWEEN STAINLESS AND NON–STAINLESS STEEL ELEMENTS.

F GROUTS

F1 AS SOON AS PRACTICABLE FOLLOWING DRILLING, THE ROCK BOLTS/DOWELS SHALL BE GROUTED. GROUTING IS TO BE CARRIED OUT IN ACCORDANCE WITH BS8081 AND BS EN 1537.

F2 GROUTING PROCEDURES SHALL INCLUDE:
- METHOD OF PLACEMENT TO GIVE UNCONTAMINATED GROUT ADEQUATE COVER AND PREVENT AIR VOIDS.
- PHASING OF GROUTING/POST GROUTING PROCEDURES.
- GROUTING PRESSURES TO GIVE ADEQUATE BOND, AVOID GROUND HEAVE AND REDUCE OVER BREAK/GROUT WASTAGE.

DRAWING No. NR/CIV/SD/285

NOTES

A DEFINITIONS

A1 ANCHORAGE – A SYSTEM WHICH PROVIDES A RESTRAINT TO A ROCK FACE.

A2 ROCK BOLT – A "SHORT" (UP TO 10m LONG) LOW CAPACITY REINFORCEMENT COMPRISING A BAR FIXED INTO ROCK SUBSEQUENTLY TENSIONED TO A PREDETERMINED LOAD. THE LENGTH OF A ROCK BOLT IS DIVIDED INTO A FREE AND BONDED (FIXED) LENGTH.

A2 ROCK DOWELS – A "SHORT" (UP TO 10m LONG) LOW CAPACITY REINFORCEMENT COMPRISING A BAR FIXED INTO ROCK OVER ITS FULL LENGTH. IT IS NOT TENSIONED TO A PREDETERMINED LOAD.

A3 ANCHORS – A LONG HIGH CAPACITY REINFORCEMENT TYPICALLY COMPRISING MULTISTRAND CABLE ANCHORED INTO ROCK OVER A FIXED LENGTH. ANCHORS ARE TENSIONED TO A PREDETERMINED LOAD.

A4 LENGTH OF ROCK BOLT/DOWEL – LENGTH FROM DISTAL END TO WHERE FACE PLATE BEARS ONTO THE EXPOSED ROCK FACE.

A5 GOOD GROUND – GROUND THAT IS SELF SUPPORTING ALLOWING OPEN HOLE BORING TECHNIQUES FOR INSTALLATION.

A6 POOR GROUND – GROUND THAT IS NOT SELF SUPPORTING REQUIRING SUPPORT OF THE DRILL HOLE DURING INSTALLATION.

B DESIGN

B1 ROCK BOLTS/DOWELS SHALL BE DESIGNED IN ACCORDANCE WITH THE REQUIREMENTS OF CURRENT NETWORK RAIL STANDARD NR/L3/CIV/071, HIGHWAYS AGENCY ADVICE NOTE BA 80/99; BS 8081 AND BS EN 1537.

B2 GEOTECHNICAL INVESTIGATION SHALL FULFIL THE REQUIREMENTS SPECIFIED IN BS EN 14490 AND EN 1997–1.

B3 THE SCHEME DESIGNER IS RESPONSIBLE FOR THE DESIGN AND CORRECT SIZING OF ALL COMPONENTS IN ACCORDANCE WITH THE DESIGN REQUIREMENTS.

B4 THE DETAILS SHOWN ON THIS DRAWING SHOW A NUMBER OF OPTIONS FOR THE APPLICATION OF ROCK BOLTS/DOWELS. THE SCHEME DESIGNER SHALL CONSIDER THE MOST APPROPRIATE OPTION TO SUIT THE PARTICULAR APPLICATION.

B5 THE SCHEME DESIGNER SHALL REFER TO CURRENT BEST PRACTICE FOR THE DESIGN AND USE OF ROCK BOLTS. REFERENCE MAY BE MADE TO DIN 21521 (ROCK BOLTS FOR MINING AND TUNNELING SUPPORT) AND ISRM PUBLICATIONS.

B6 WHERE LATERAL CLEARANCES ARE TO BE REDUCED THESE SHALL BE AGREED WITH THE GAUGING ENGINEER.

B7 THE SCHEME DESIGNER SHALL GIVE APPROPRIATE CONSIDERATION TO THE REQUIREMENTS OF STRAY CURRENT PROTECTION. REFER TO NR/L3/CIV/071 CLAUSE 10.2.

B8 DESIGN LIFE OF 60 YEARS.

Rev	Date	Description of revision	Design'd	C'kd
B	MAY 2011	SECOND ISSUE	GPR	SWMF
A	08.08.06	FIRST ISSUE	NGAY	NGAY

Network Rail

Network Rail Infrastructure Ltd. Registered Office: Kings Place, 90 York Way, London, N1 9AG

Approved	P CLARK	Senior Prog. Eng. Manager Investment Projects Building & Civils	PC	MAY 2011
	Name	Position	Signature	Date

Master copy with original signatures held by Network Rail HQ CIVIL ENGINEERING STANDARD DESIGN

© COPYRIGHT NETWORK RAIL 2011

EARTHWORKS

ROCK BOLTS/DOWELS GENERAL ARRANGEMENT

Scale	AS SHOWN	
Drawing Number	NR/CIV/SD/285	REV. B

Full document details: NR NR-CIV-SD-285 ISSUE B 2011
Documents Document Sharing Hub
Copyright Network Rail
Provided by IHS under licence with Network Rail
No reproduction or networking permitted without license from IHS
Licensee=Halcrow Willbros JV/5935610/01, User=sam, sthart
2011-06-06 08:00:00 Single User Site License