Supplementary Information

The following information is associated with Network Rail Standard:
NR CIV/SD/286 Rev A

Additional Content Access

Click the link below to access CAD version of this drawing.

CAD Drawing

- CIV/SD/286

If you have any questions, or need assistance, please contact **IHS Support**

Information accessed via the links above is the property of the Copyright holder

IHS Additional Content Page

--`,,,,,,`,,,,,,`,,`,,,,,,,,`-`-`,,`,,`,`,,`---

Documents
Document Sharing Hub

Copyright Network Rail
Provided by IHS under license with Network Rail
No reproduction or networking permitted without license from IHS
Full document details: NR NR-CIV-SD-286 ISSUE A 2011

Licensee=Weston Williamson/5989497001, User=sam, albett
Not for Resale, 03/27/2016 20:51:38 MDT

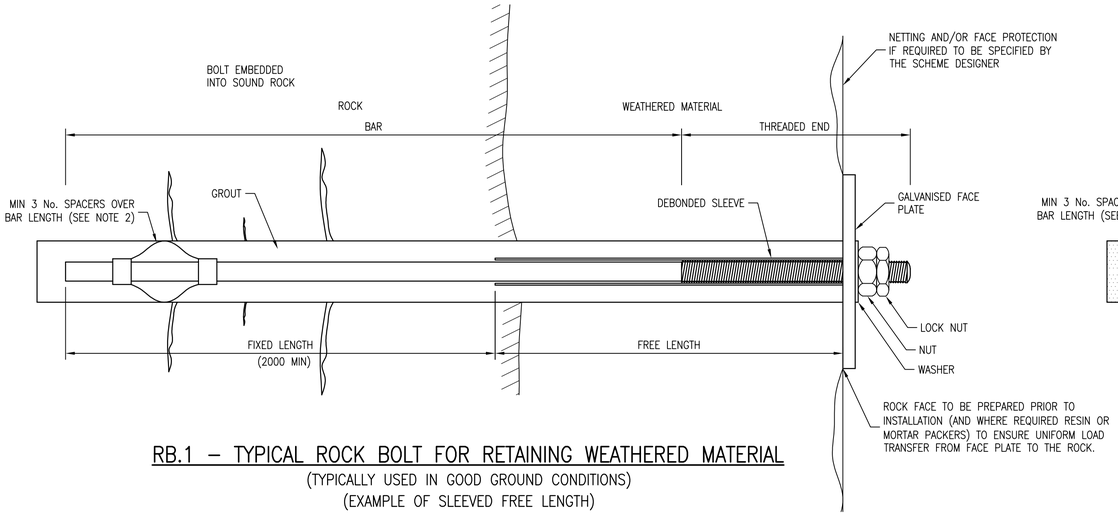

RB.1 – TYPICAL ROCK BOLT FOR RETAINING WEATHERED MATERIAL

(TYPICALLY USED IN GOOD GROUND CONDITIONS)
(EXAMPLE OF SLEEVED FREE LENGTH)

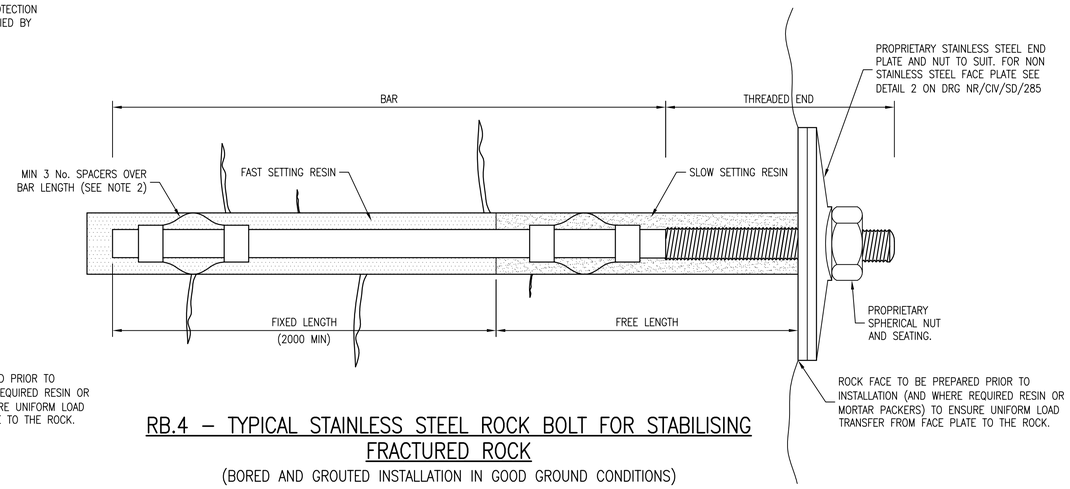

RB.4 – TYPICAL STAINLESS STEEL ROCK BOLT FOR STABILISING FRACTURED ROCK

(BORED AND GROUTED INSTALLATION IN GOOD GROUND CONDITIONS)
(STAINLESS STEEL BAR FOR HIGH CORROSIVE GROUND CONDITIONS)
(EXAMPLE OF SLOW/FAST SETTING RESIN TO GENERATE FREE LENGTH)

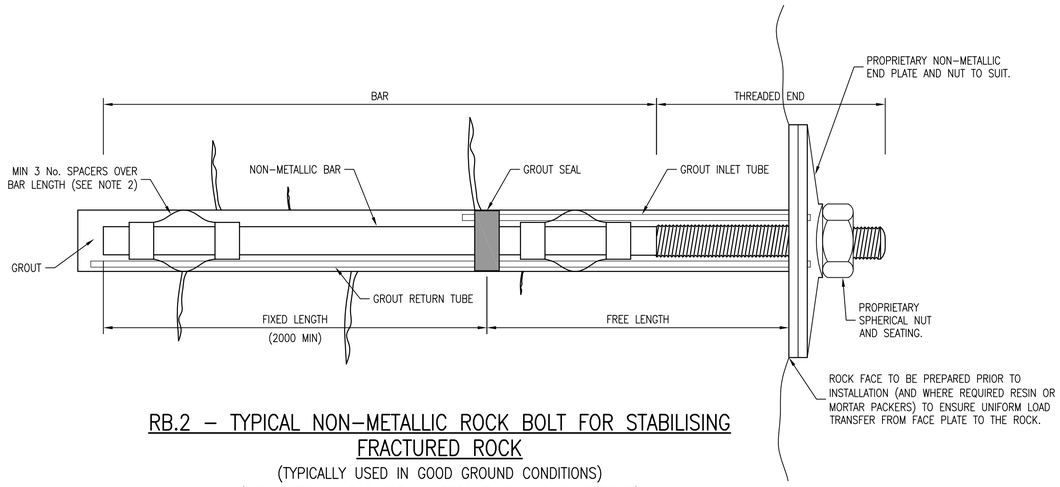

RB.2 – TYPICAL NON–METALLIC ROCK BOLT FOR STABILISING FRACTURED ROCK

(TYPICALLY USED IN GOOD GROUND CONDITIONS)
(NON–METALLIC BAR FOR AGGRESSIVE GROUND CONDITIONS)
(EXAMPLE OF BORED AND PHASED GROUT INSTALLATION TO GENERATE FREE LENGTH)
(LINESIDE FIRE RISK TO BE CONSIDERED WHEN USING NON–METALLIC MATERIALS)

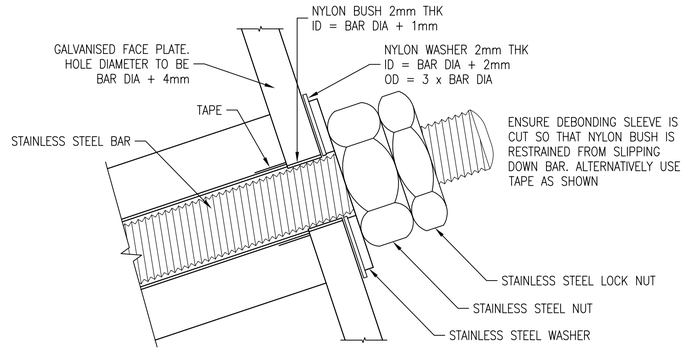

DETAIL TO BE USED WHERE STAINLESS STEEL BAR IS USED WITH NON–STAINLESS FACE PLATE

(TYPICALLY USED WHERE HIGH CORROSION PROTECTION IS REQUIRED)

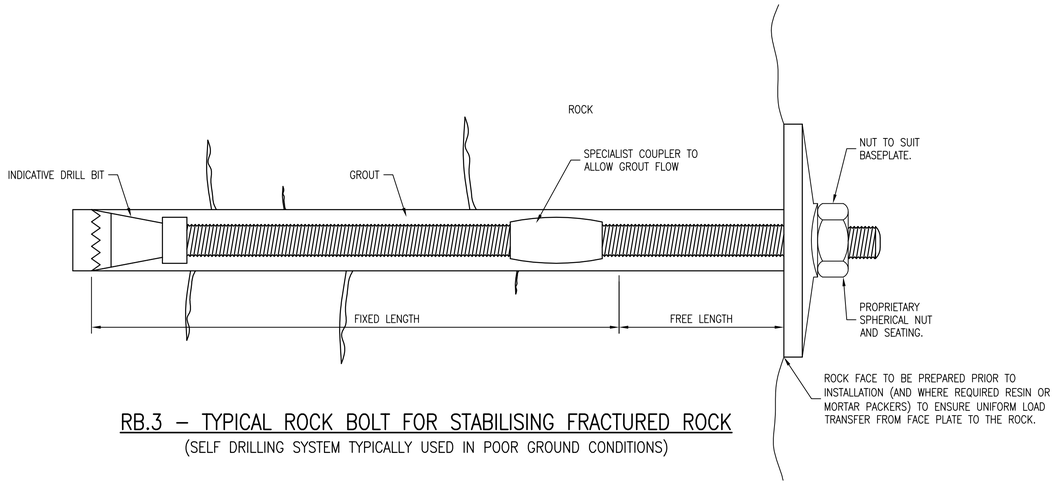

RB.3 – TYPICAL ROCK BOLT FOR STABILISING FRACTURED ROCK

(SELF DRILLING SYSTEM TYPICALLY USED IN POOR GROUND CONDITIONS)

DRAWING No. NR/CIV/SD/286

NOTES

1. FOR ALL NOTES REFER TO DRAWING NR/CIV/SD/285.
2. ONLY INDICATIVE SPACERS ARE SHOWN NUMBER AND SPACING TO BE DETAILED BY THE SCHEME DESIGNER. SEE NOTES D8 AND D9 ON DRAWING NR/CIV/SD/285.
3. SHOWN METHODS OF FREE LENGTH GENERATION CAN BE USED ON ALL ROCK BOLT TYPES, AS SPECIFIED BY THE SCHEME DESIGNER. SEE NOTE J10 ON DRAWING NR/CIV/SD/285.
4. FIXED LENGTH MAY BE ACHIEVED BY USING A MECHANICAL EXPANSION SHELL. TO BE SPECIFIED BY THE SCHEME DESIGNER.

Rev	Date	Description of revision	Design'd	C'kd
A	MAY 2011	FIRST ISSUE	GPR	SWMF

Network Rail

Network Rail Infrastructure Ltd. Registered Office:
Kings Place, 90 York Way, London, N1 9AG

	Name	Position	Signature	Date
Approved	P CLARK	Senior Prog. Eng. Manager Investment Projects Building & Civils	PC	MAY 2011

Master copy with original signatures held by Network Rail HQ
CIVIL ENGINEERING STANDARD DESIGN

© COPYRIGHT NETWORK RAIL 2011

EARTHWORKS

ROCK BOLTS (ACTIVE)
DETAILS

Scale: AS SHOWN

Drawing Number: NR/CIV/SD/286 REV. A

Full document details: NR NR-CIV-SD-286 ISSUE A 2011
AVA Documents
Document Sharing Hub
Licence Watson Williamson/05589105 User:sam. allen
Copyright Network Rail
Provided by IHS under licence with Network Rail
No reproduction or networking permitted without licence from IHS