Supplementary Information

The following information is associated with Network Rail Standard:
NR CIV/SD/287 Rev A

Additional Content Access

Click the link below to access CAD version of this drawing.

CAD Drawing

- CIV/SD/287

If you have any questions, or need assistance, please contact **IHS Support**

Information accessed via the links above is the property of the Copyright holder

IHS Additional Content Page

Documents
Document Sharing Hub

Copyright Network Rail
Provided by IHS under license with Network Rail
No reproduction or networking permitted without license from IHS
Full document details: NR NR-CIV-SD-287 ISSUE A 2011

Licensee=Weston Williamson/5989497001, User=sam, albett
Not for Resale, 03/27/2016 20:51:41 MDT

Full document details: NR NR-CIV SD 287 ISSUE A 2011

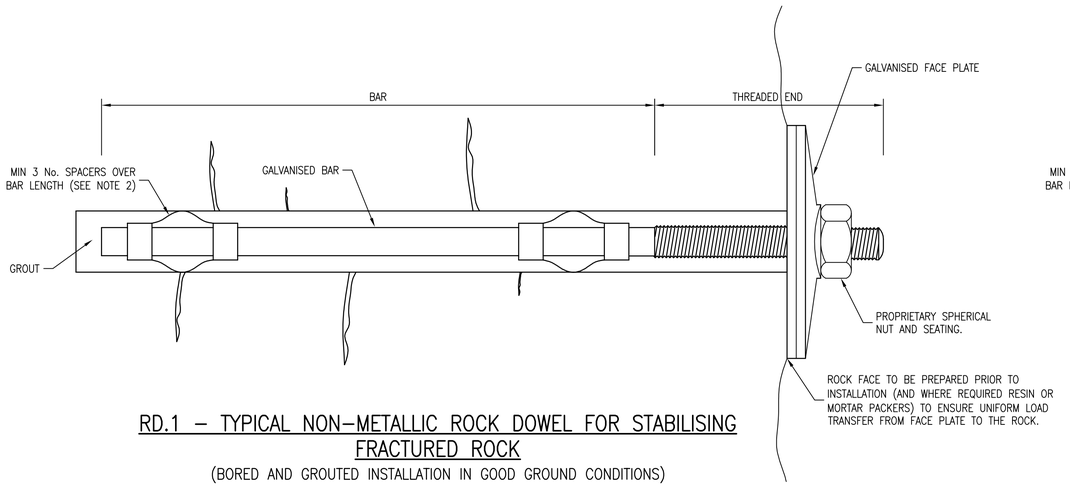

RD.1 – TYPICAL NON–METALLIC ROCK DOWEL FOR STABILISING FRACTURED ROCK

(BORED AND GROUTED INSTALLATION IN GOOD GROUND CONDITIONS)

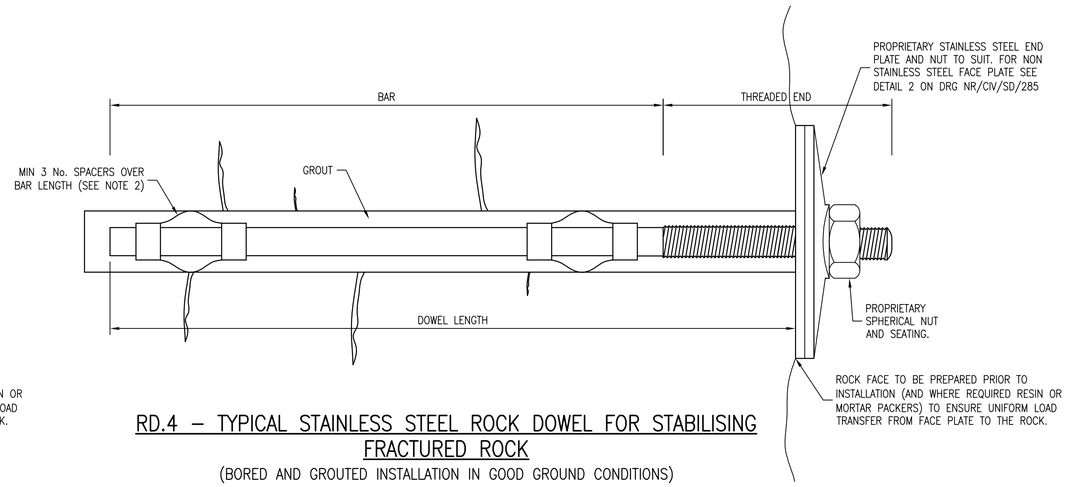

RD.4 – TYPICAL STAINLESS STEEL ROCK DOWEL FOR STABILISING FRACTURED ROCK

(BORED AND GROUTED INSTALLATION IN GOOD GROUND CONDITIONS)
(STAINLESS STEEL BAR FOR HIGH CORROSIVE GROUND CONDITIONS)

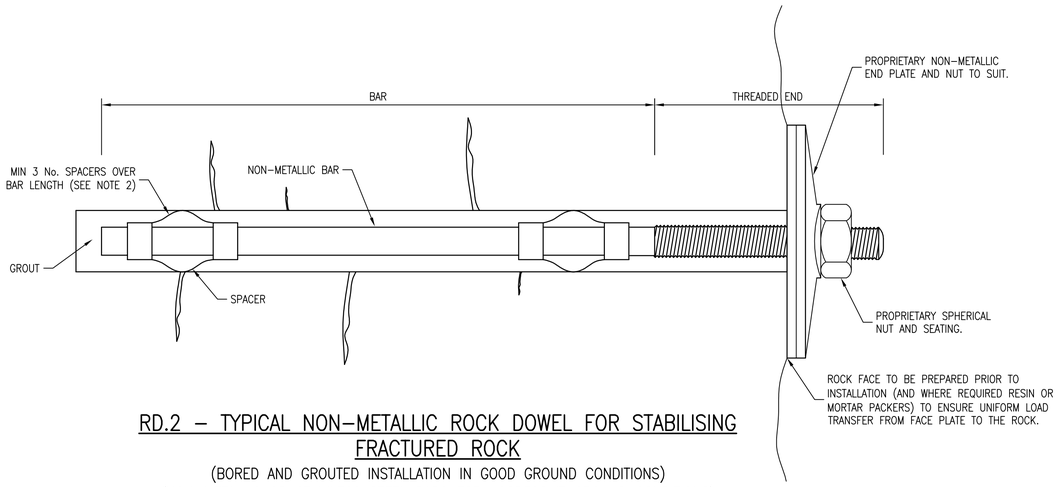

RD.2 – TYPICAL NON–METALLIC ROCK DOWEL FOR STABILISING FRACTURED ROCK

(BORED AND GROUTED INSTALLATION IN GOOD GROUND CONDITIONS)
(NON–METALLIC OR STAINLESS STEEL BARS FOR AGGRESSIVE GROUND CONDITIONS)
(LINESIDE FIRE RISK TO BE CONSIDERED WHEN USING NON–METALLIC MATERIALS)

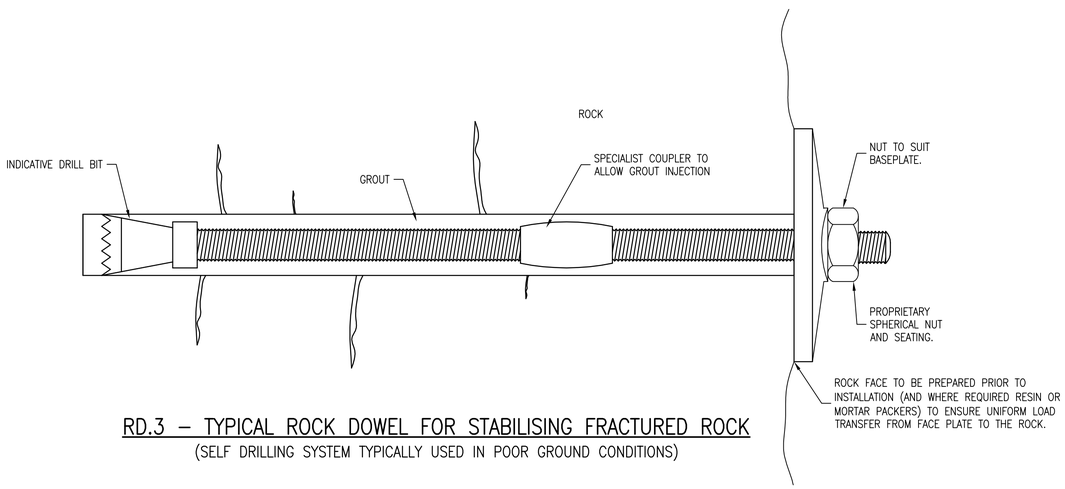

RD.3 – TYPICAL ROCK DOWEL FOR STABILISING FRACTURED ROCK

(SELF DRILLING SYSTEM TYPICALLY USED IN POOR GROUND CONDITIONS)

DRAWING No. NR/CIV/SD/287

NOTES

1. FOR ALL NOTES REFER TO DRAWING NR/CIV/SD/285.
2. ONLY INDICATIVE SPACERS ARE SHOWN NUMBER AND SPACING TO BE DETAILED BY THE SCHEME DESIGNER. SEE NOTES D8 AND D9 ON DRAWING NR/CIV/SD/285.
3. FIXED LENGTH MAY BE ACHIEVED BY USING A MECHANICAL EXPANSION SHELL. TO BE SPECIFIED BY THE SCHEME DESIGNER.

Rev	Date	Description of revision	Design'd	C'kd
A	MAY 2011	FIRST ISSUE	GPR	SWMF

Network Rail

Network Rail Infrastructure Ltd. Registered Office: Kings Place, 90 York Way, London, N1 9AG

Approved	P CLARK	Senior Prog. Eng. Manager Investment Projects Building & Civils	PC	MAY 2011
	Name	Position	Signature	Date

Master copy with original signatures held by Network Rail HQ CIVIL ENGINEERING STANDARD DESIGN

© COPYRIGHT NETWORK RAIL 2011

EARTHWORKS

ROCK DOWELS (PASSIVE) DETAILS

Scale	AS SHOWN	
Drawing Number	NR/CIV/SD/287	REV. A

Documents Document Sharing Hub

Copyright Network Rail
Provided by IHS under licence with Network Rail
No reproduction or distribution without prior permission or licence from IHS
Licensee=Mott MacDonald Group Limited/5956007001, User=sam, allan