The following information is associated with Network Rail Standard:
NR CIV/SD/3014 Rev P1

Additional Content Access

Click the link below to access CAD version of this drawing.

CAD Drawing

- CIV/SD/3014

If you have any questions, or need assistance, please contact **IHS Support**

Information accessed via the links above is the property of the Copyright holder

IHS Additional Content Page

Documents
Document Sharing Hub

Copyright Network Rail
Provided by IHS under license with Network Rail
No reproduction or networking permitted without license from IHS
Licensee=Weston Williamson/5989497001, User=sam, albett
Not for Resale, 03/28/2016 00:38:46 MDT

Full document details: NR NR-CIV-SD-3014 ISSUE P1 2006

A3

0 100

Note

1. This drawing is to be read in conjunction with drawing No. NR/CIV/SD/3010 & 3011 and all drawings listed thereon.

2. Particular Projects may require additional uPVC ducts

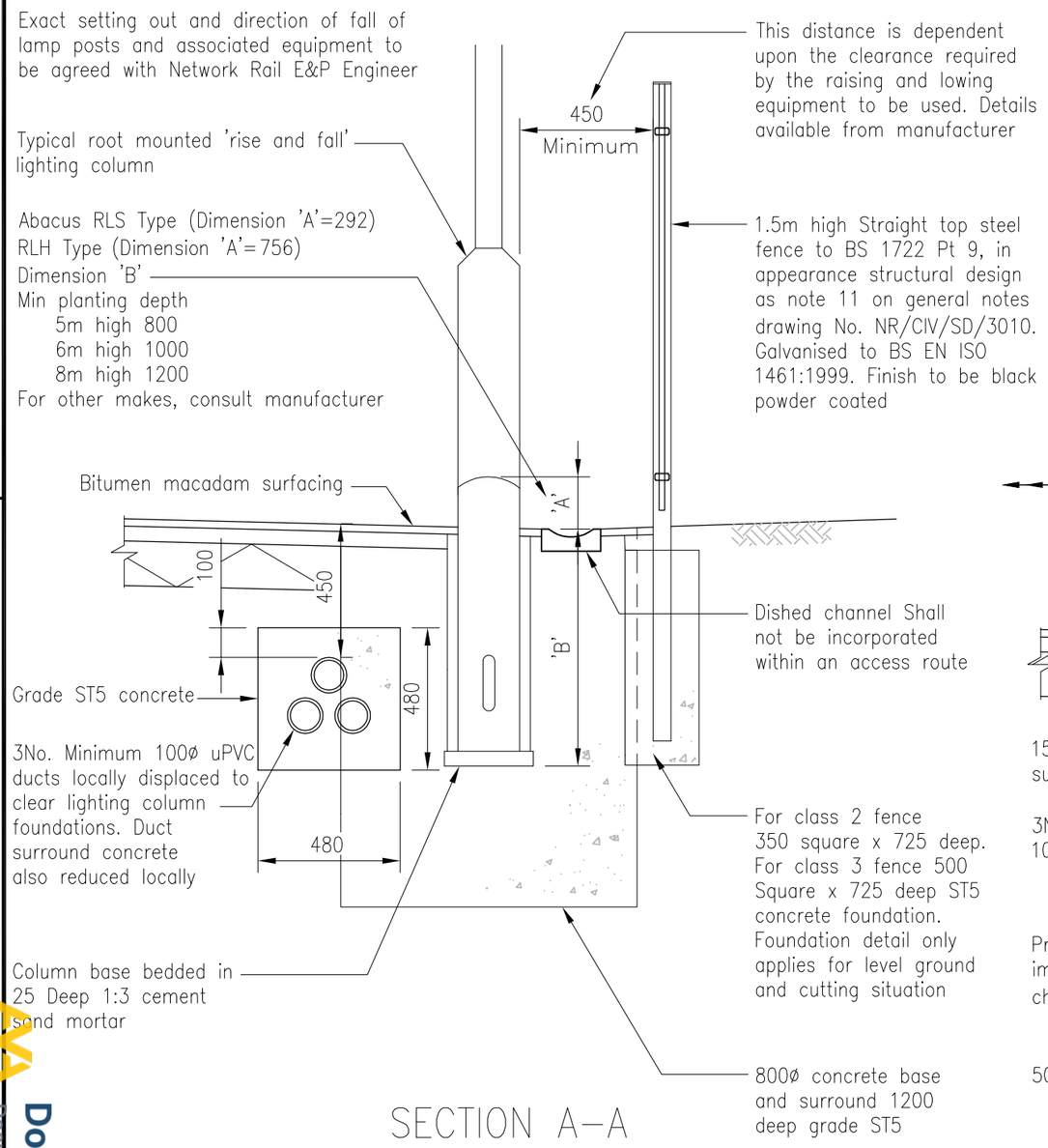

SECTION A–A
LIGHTING DETAIL
Scale 1:20

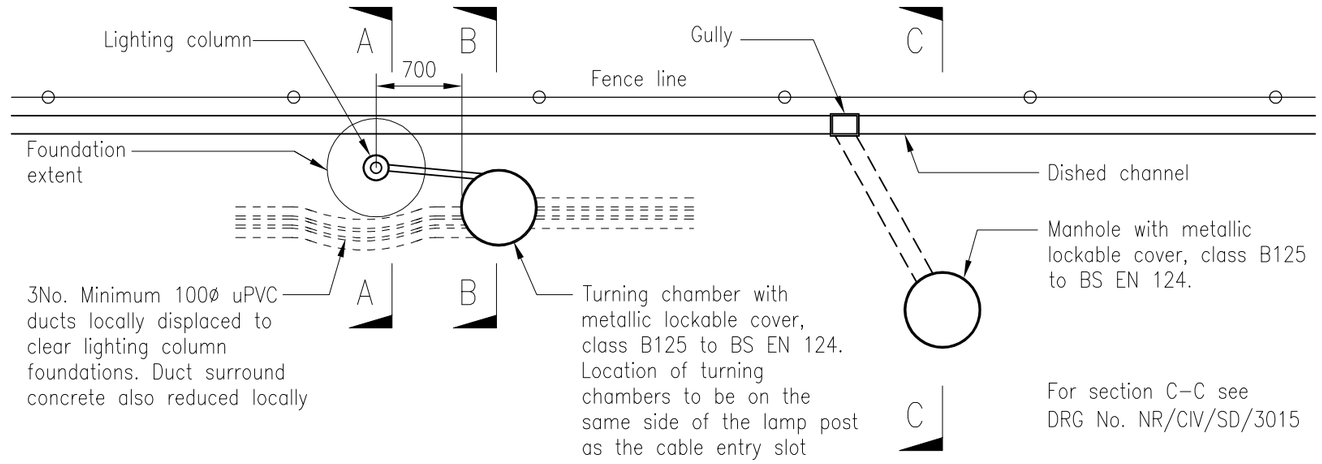

PLAN ON BACK OF PLATFORM
Scale 1:50

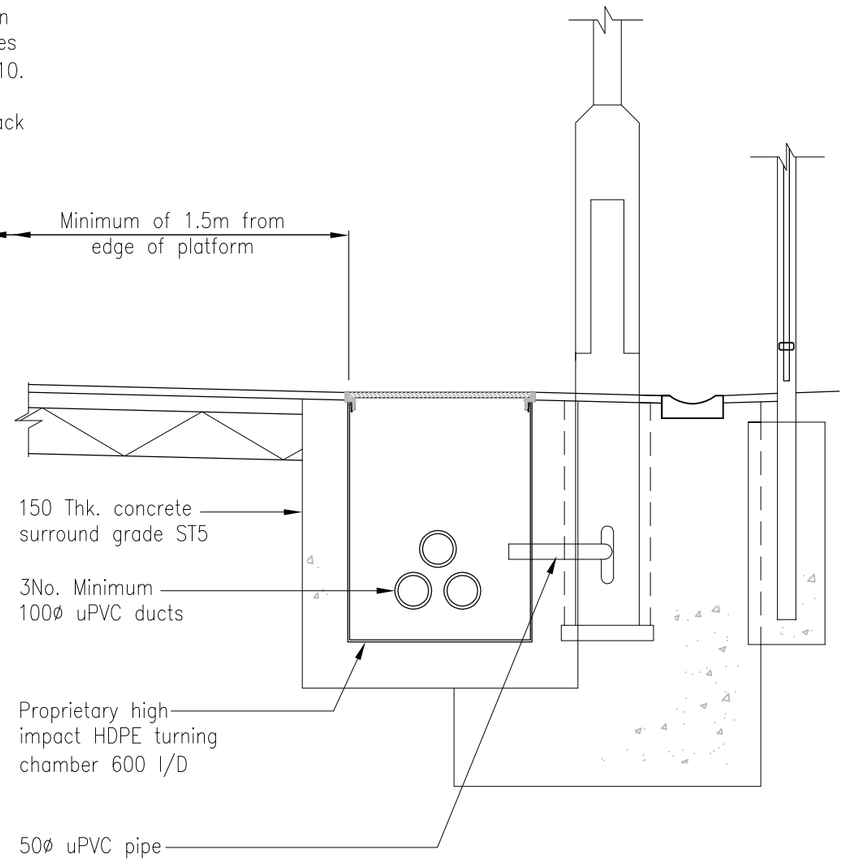

SECTION B–B TURNING
CHAMBER DETAIL
Scale 1:20

Rev	Date	Description of revision	Design'd	C'kd
P1				

Network Rail

40 Melton Street
London NW1 2EE

Tel: 020–7557–8000

Approved —		Prog.Eng. Manager Civils, MP & I		
Authorised —		Director of Civil Engineering		
	Name	Position	Signature	Date

Master copy with original signatures held by Network Rail HQ CIVIL ENGINEERING STANDARD DESIGN

© COPYRIGHT NETWORK RAIL 2006

Standard Platform Design

Traditional Front Wall Platform. Sheet 5 of 10 Lighting and Turning Chamber Details

Scale	As Shown
Drawing Number	NR/CIV/SD/3014 P1

Licensee=Weston Williamson/5989497001, User=sam. albett
Not for Resale, 03/28/2016 00:38:46 MDT

Documents
Document Sharing Hub

Copyright Network Rail
Provided by IHS under license with Network Rail
No reproduction or networking permitted without license from IHS