Supplementary Information

The following information is associated with Network Rail Standard:
NR CIV/SD/3018 Rev P1

Additional Content Access

Click the link below to access CAD version of this drawing.

CAD Drawing

- CIV/SD/3018

If you have any questions, or need assistance, please contact **IHS Support**

Information accessed via the links above is the property of the Copyright holder

IHS Additional Content Page

Documents
Document Sharing Hub

Copyright Network Rail
Provided by IHS under license with Network Rail
No reproduction or networking permitted without license from IHS
Full document details: NR NR-CIV-SD-3018 ISSUE P1 2006

Licensee=Weston Williamson/5989497001, User=sam, albett
Not for Resale, 03/28/2016 00:39:30 MDT

Full document details: NR NR-CIV-SD-3018 ISSUE P1 2006

A3

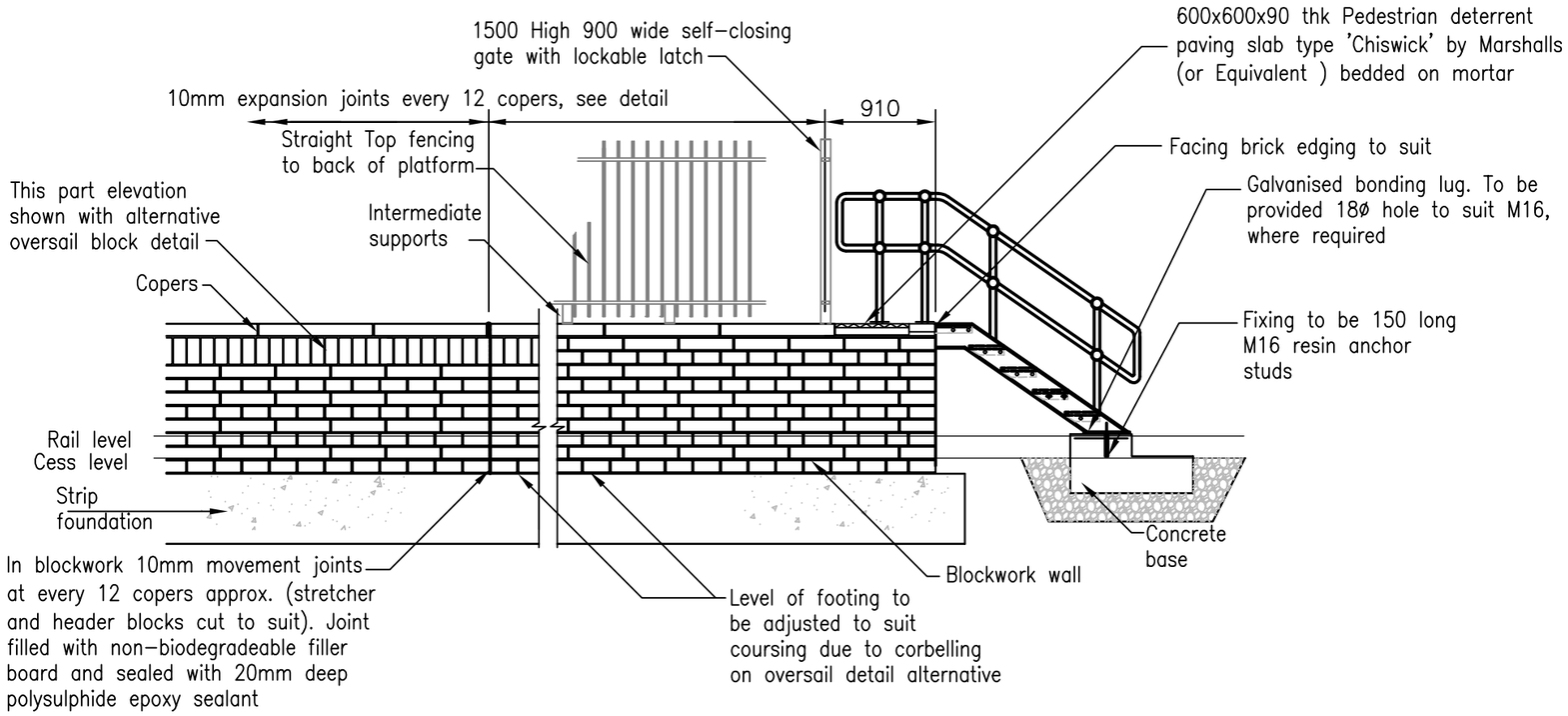

FRONT ELEVATION ON PLATFORM END

Scale 1:50

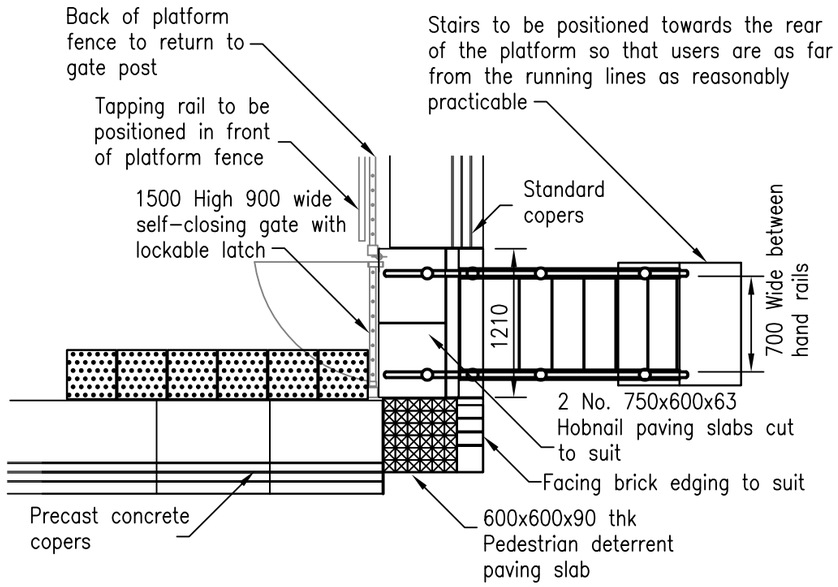

TYPICAL PLAN ON PLATFORM END STEPS

Scale 1:50

Stairway spec:-

- Proprietary galvanised mild steel/GRP stairway with open type treads designed by fabricator/GRP equivalent to comply with BS5395 (general duty) and BS6399
- Handrailing and standards to be from proprietary galvanised – 48.3ø o.d. mild steel tubing/GRP equivalent
- Stairway going 250mm – rise 180mm

Note

1. This drawing is to be read in conjunction with drawing No. NR/CIV/SD/3010 & 3011 and drawings listed thereon.

2. Metallic access steps and hand rails to be electrically earthed if required in accordance with the requirements of RT/E/S/21085 and RT/E/C/11600.

3. The end detail for new or extended platforms shall NOT normally incorporate ramps (as previous practice). Ramps shall only be provided where a site specific justification is made, for example

   (a) to provide access for station staff/train crew
   (b) as an access point for people authorised to work on the line
   (c) as part of a station emergency evacuation route

4. All exposed external corners of concrete to be chamfered 10 x10.

5. Any site lighting required to stairs to be agreed by Network Rail and E&P Eng.

Rev	Date	Description of revision	Design'd	C'kd
P1				

Network Rail

40 Melton Street
London NW1 2EE
Tel: 020-7557-8000

Approved –		Prog.Eng. Manager Civils, MP & I		
Authorised –		Director of Civil Engineering		
	Name	Position	Signature	Date

Master copy with original signatures held by Network Rail HQ CIVIL ENGINEERING STANDARD DESIGN

© COPYRIGHT NETWORK RAIL 2006

Standard Platform Design

Traditional Front Wall Platform. Sheet 9 of 10 Plan and Elevation on Platform End Steps

Scale	As Shown
Drawing Number	NR/CIV/SD/3018 P1

Licensee=Weston Williamson/5989497001, User=sam. albett
Not for Resale, 03/28/2016 00:39:30 MDT
Copyright Network Rail
Provided by IHS under license with Network Rail
No reproduction or networking permitted without license from IHS
Documents
Document Sharing Hub