Supplementary Information

The following information is associated with Network Rail Standard:
NR CIV/SD/3025 Rev P1

Additional Content Access

Click the link below to access CAD version of this drawing.

CAD Drawing

- CIV/SD/3025

If you have any questions, or need assistance, please contact **IHS Support**

Information accessed via the links above is the property of the Copyright holder

IHS Additional Content Page

Documents
Document Sharing Hub

Copyright Network Rail
Provided by IHS under license with Network Rail
No reproduction or networking permitted without license from IHS
Full document details: NR NR-CIV-SD-3025 ISSUE P1 2006

Licensee=Weston Williamson/5989497001, User=sam, albett
Not for Resale, 03/28/2016 00:37:52 MDT

Full document details: NR NR-CIV-SD-3025 ISSUE P1 2006

A3

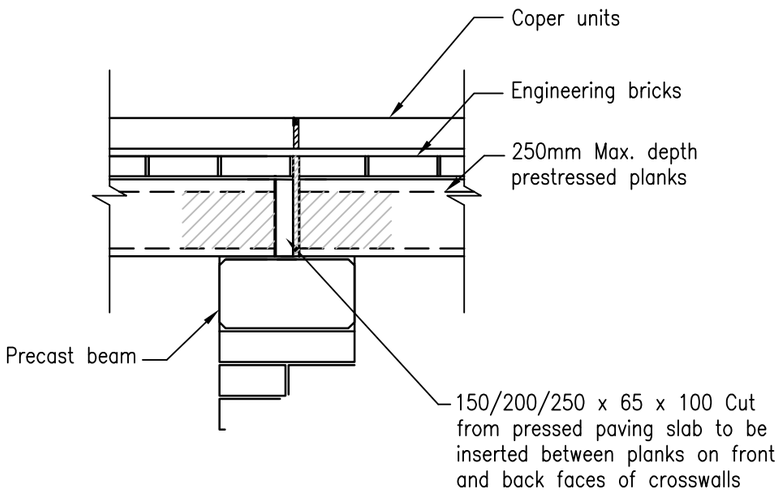

ELEVATION SHOWING SLAB INSERT
Scale 1:20

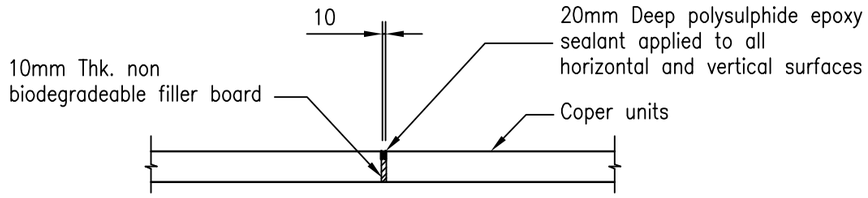

COPING UNIT EXPANSION JOINT DETAIL
Scale 1:20

Note

1. This drawing is to be read in conjunction with drawing No. NR/CIV/SD/3020 & 3021 and drawings listed thereon.

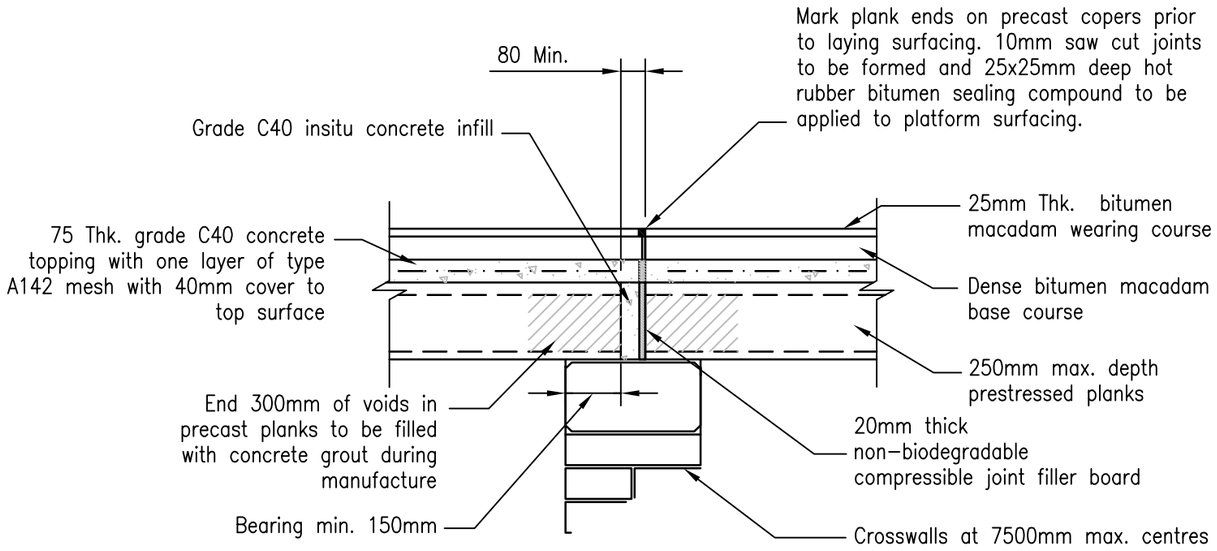

EXPANSION JOINT DETAIL
Scale 1:20

Expansion Locations	
Span range L (m)	Max. Centres (m)
3.0 – 5.0	10
5.01 – 6.5	13
6.51 – 7.5	7.5

For L dimension see drawing No. NR/CIV/SD/3024

Rev	Date	Description of revision	Design'd	C'kd
P1				

Network Rail

40 Melton Street
London NW1 2EE
Tel: 020–7557–8000

Approved —		Prog.Eng. Manager Civils, MP & I		
Authorised —		Director of Civil Engineering		
	Name	Position	Signature	Date

Master copy with original signatures held by Network Rail HQ CIVIL ENGINEERING STANDARD DESIGN

© COPYRIGHT NETWORK RAIL 2006

Standard Platform Design

Type 1 Crosswall Platform Sheet 6 of 15 Expansion Joint Details

Scale	As Shown
Drawing Number	NR/CIV/SD/3025 P1

Licensee=Weston Williamson/5989497001, User=sam, albert
Not for Resale, 03/28/2016 00:37:52 MDT
Copyright Network Rail
Provided by IHS under license with Network Rail
No reproduction or networking permitted without license from IHS
Documents
Document Sharing Hub