The following information is associated with Network Rail Standard:
NR CIV/SD/3026 Rev P1

Additional Content Access

Click the link below to access CAD version of this drawing.

CAD Drawing

- CIV/SD/3026

If you have any questions, or need assistance, please contact **IHS Support**

Information accessed via the links above is the property of the Copyright holder

IHS Additional Content Page

Documents
Document Sharing Hub

Copyright Network Rail
Provided by IHS under license with Network Rail
No reproduction or networking permitted without license from IHS
Full document details: NR NR-CIV-SD-3026 ISSUE P1 2006

Licensee=Weston Williamson/5989497001, User=sam, albett
Not for Resale, 03/28/2016 00:38:34 MDT

Full document details: NR NR-CIV-SD-3026 ISSUE P1 2006

A3 0 100

Notes

1. This drawing is to be read in conjunction with drawing No. NR/CIV/SD/3020 & 3021 and drawings listed thereon.
2. Contractor to provide suitable lifting attachments to suit his method of handling.
3. Nominal concrete cover to be 40mm, Unless Noted Otherwise.
4. Concrete grade – see drawing No. NR/CIV/SD/3020 & 3021
5. Indicative position of lifting points marked thus ⊕
6. Lifting wt of Precast Beam = 232kg/m
7. Chamfers 20x20

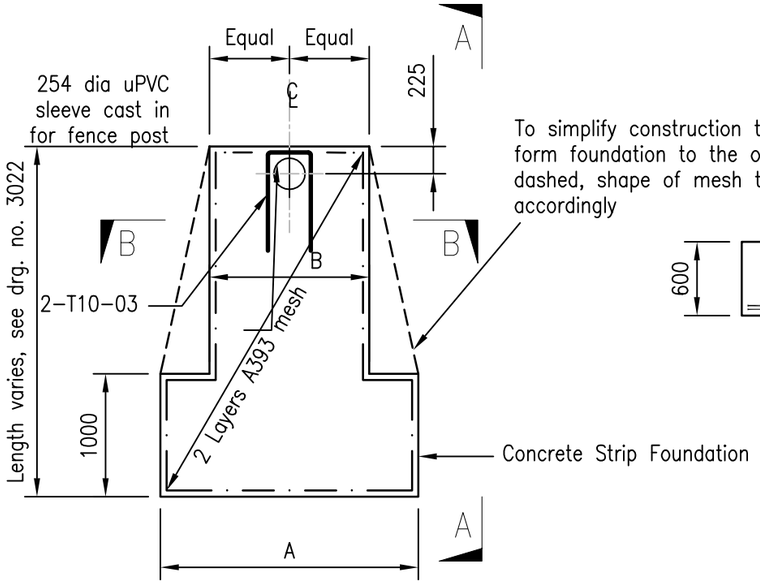

To simplify construction the contractor may form foundation to the outlines shown dashed, shape of mesh to be adjusted accordingly

PLAN ON STRIP FOUNDATION
Scale 1:50

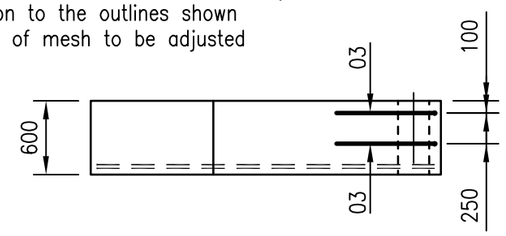

VIEW ON A–A
Scale 1:50

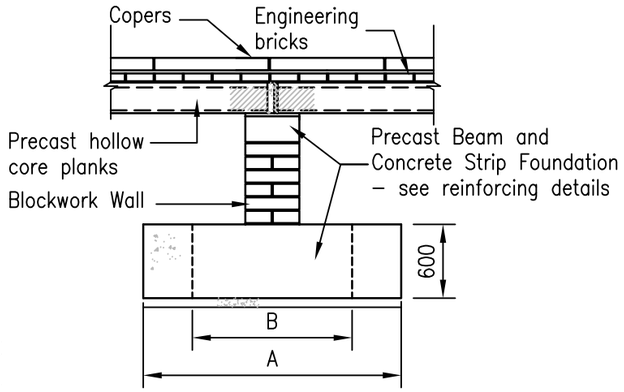

TYPICAL SECTION THROUGH CROSSWALL
Scale 1:50

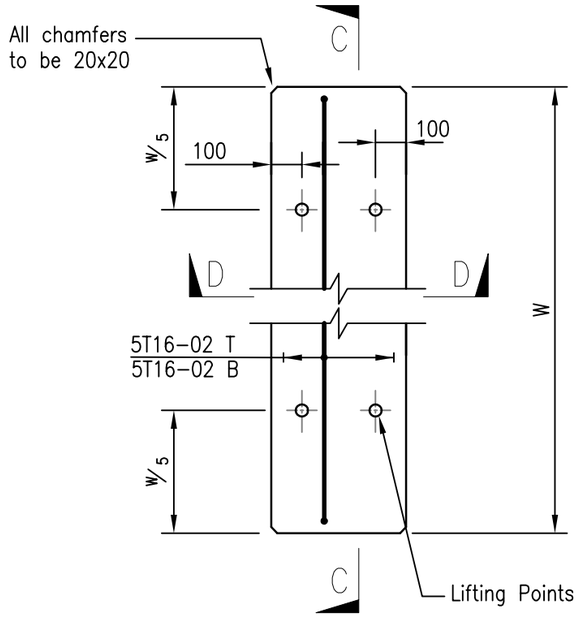

PLAN ON PRECAST BEAM
Scale 1:20

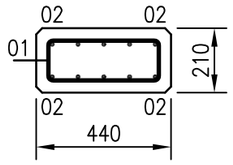

SECTION D–D
Scale 1:20

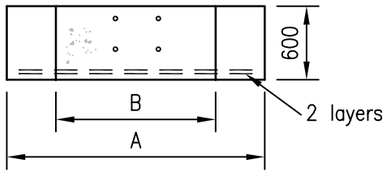

SECTION B–B
Scale 1:50

N = (W – 80) / 100 + 1 = Whole Number

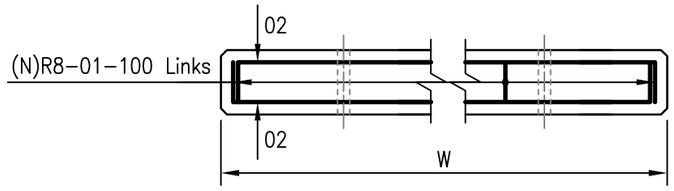

W = (Platform width –165mm) see drawing no. 3022

SECTION C–C
Scale 1:20

Rev	Date	Description of revision	Design'd	C'kd
P1				

Network Rail

40 Melton Street
London NW1 2EE

Tel: 020–7557–8000

Approved –		Prog.Eng. Manager Civils, MP & I		
Authorised –		Director of Civil Engineering		
	Name	Position	Signature	Date

Master copy with original signatures held by Network Rail HQ CIVIL ENGINEERING STANDARD DESIGN

© COPYRIGHT NETWORK RAIL 2006

Standard Platform Design

Type 1 Crosswall Platform Reinforcement Details For Foundation And Precast Beam – Sheet 7 of 15

Scale	As Shown
Drawing Number	NR/CIV/SD/3026 P1

Documents
Document Sharing Hub
Licensee=Weston Williamson/5989497001, User=sam, albett
Not for Resale, 03/28/2016 00:38:34 MDT
Copyright Network Rail
Provided by IHS under license with Network Rail
No reproduction or networking permitted without license from IHS