Supplementary Information

The following information is associated with Network Rail Standard:
NR CIV/SD/3031 Rev P1

Additional Content Access

Click the link below to access CAD version of this drawing.

CAD Drawing

- CIV/SD/3031

If you have any questions, or need assistance, please contact **IHS Support**

Information accessed via the links above is the property of the Copyright holder

IHS Additional Content Page

Documents
Document Sharing Hub

Copyright Network Rail
Provided by IHS under license with Network Rail
No reproduction or networking permitted without license from IHS
Full document details: NR NR-CIV-SD-3031 ISSUE P1 2006

Licensee=Weston Williamson/5989497001, User=sam, albett
Not for Resale, 03/28/2016 00:39:24 MDT

Full document details: NR NR-CIV-SD-3031 ISSUE P1 2006

A3

0 100

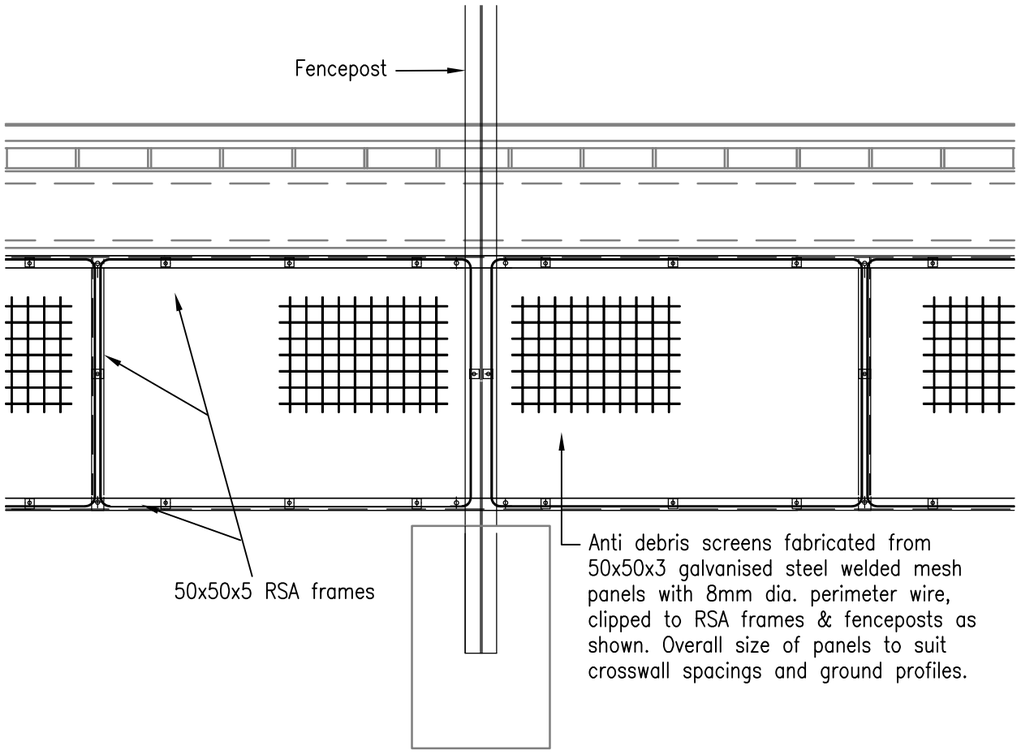

DETAILS ON REAR ELEVATION

Scale 1:20

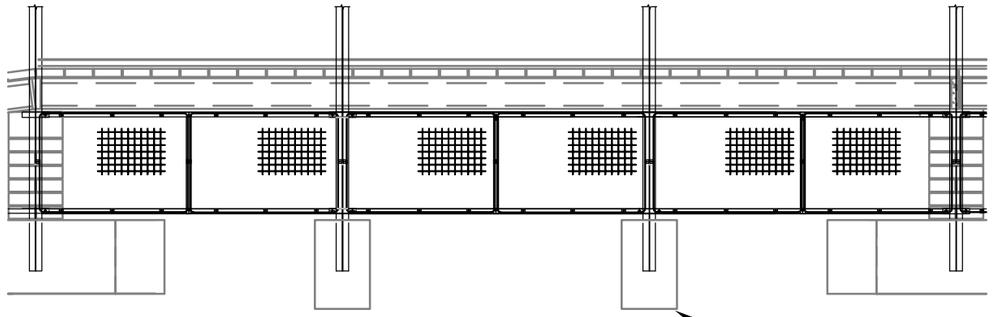

REAR ELEVATION

Scale 1:50

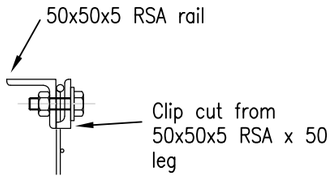

SECTION THROUGH TOP RAIL
(BOTTOM RAIL SIMILAR)

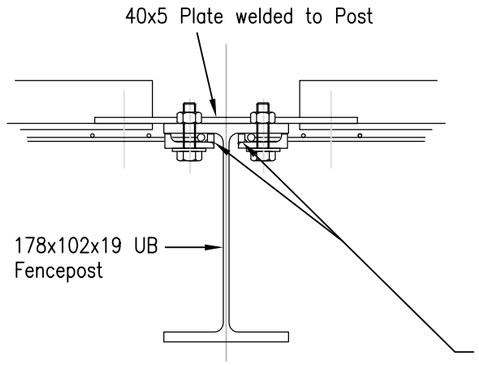

SECTION SHOWING MESH PANEL CONNECTION TO FENCE POST

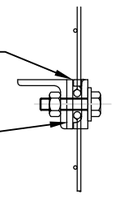

SECTION THROUGH INTERMEDIATE VERTICAL RAIL
(SIDE VERTICAL SIMILAR)

FIXING DETAILS

Scale 1:5

Rev	Date	Description of revision	Design'd	C'kd
P1				

Network Rail

40 Melton Street
London NW1 2EE

Tel: 020-7557-8000

Approved —		Prog.Eng. Manager Civils, MP & I		
Authorised —		Director of Civil Engineering		
	Name	Position	Signature	Date

Master copy with original signatures held by Network Rail HQ
CIVIL ENGINEERING STANDARD DESIGN

© COPYRIGHT NETWORK RAIL 2006

Standard Platform Design

Type 1 Crosswall Platform Sheet 12 of 15
Details of Protective Mesh Panels to Front & rear of Platform and Intermediate Fence Posts

Scale	As Shown
Drawing Number	NR/CIV/SD/3031 P1

Licensee=Weston Williamson/5989497001, User=sam. albett
Not for Resale, 03/28/2016 00:39:24 MDT
Copyright Network Rail
Provided by IHS under license with Network Rail
No reproduction or networking permitted without license from IHS
Documents
Document Sharing Hub