Supplementary Information

The following information is associated with Network Rail Standard:
NR CIV/SD/3033 P1

Additional Content Access

Click the links below to access the CAD version of this drawing.

CAD Drawing

- CIVSD3033

If you have any questions, or need assistance, please contact **IHS Support**

Information accessed via the links above is the property of the Copyright holder

IHS Additional Content Page

Documents
Document Sharing Hub

Copyright Network Rail
Provided by IHS under license with Network Rail
No reproduction or networking permitted without license from IHS
Full document details: NR NR-CIV-SD-3033 ISSUE P1 2006

Licensee=Weston Williamson/5989497001, User=sam, albett
Not for Resale, 03/28/2016 00:39:27 MDT

Full document details: NR NR-CIV-SD-3033 ISSUE P1 2006

A3 0 100

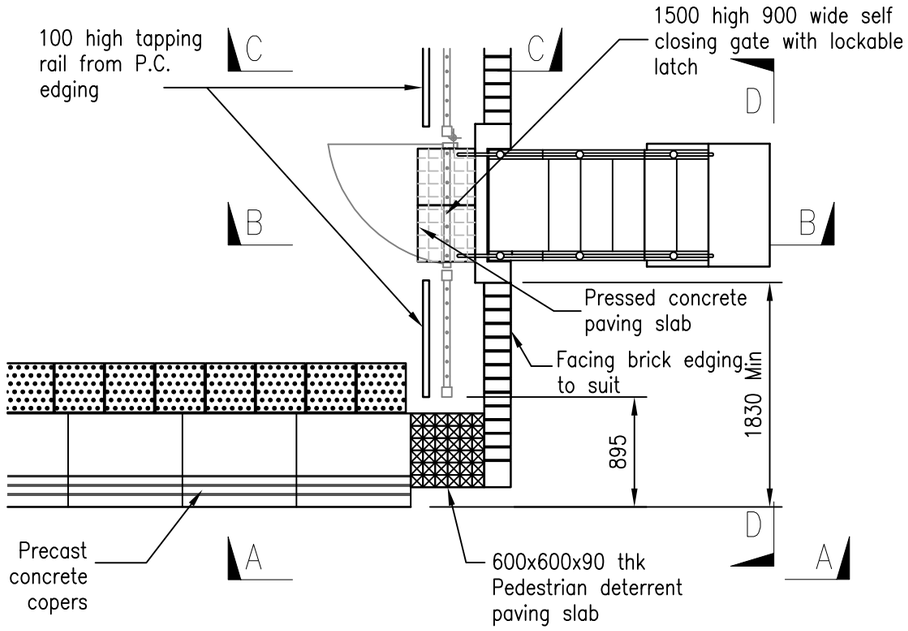

TYPICAL PLAN ON PLATFORM END STEPS
Scale 1:50

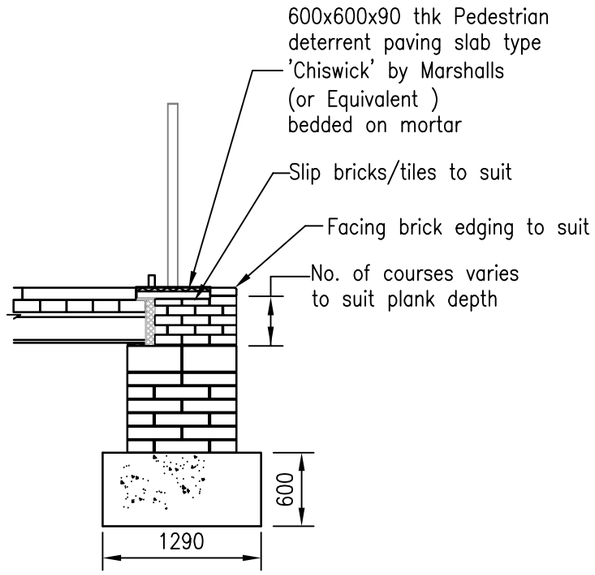

ELEVATION A–A THROUGH PLATFORM END
Scale 1:50

Note
1. This drawing is to be read in conjunction with drawing No. NR/CIV/SD/3020 & 3021 and drawings listed thereon.

2. Metallic access steps and hand rails to be electrically earthed if required in accordance with the requirements of RT/E/S/21085 and RT/E/C/11600.

3. The end detail for new or extended platforms shall NOT normally incorporate ramps (as previous practice). Ramps shall only be provided where a site specific justification is made, for example

(a) to provide access for station staff/train crew

(b) as an access point for people authorised to work on the line

(c) as part of a station emergency evacuation route

Notes continued on sheet NR/CIV/SD/3034

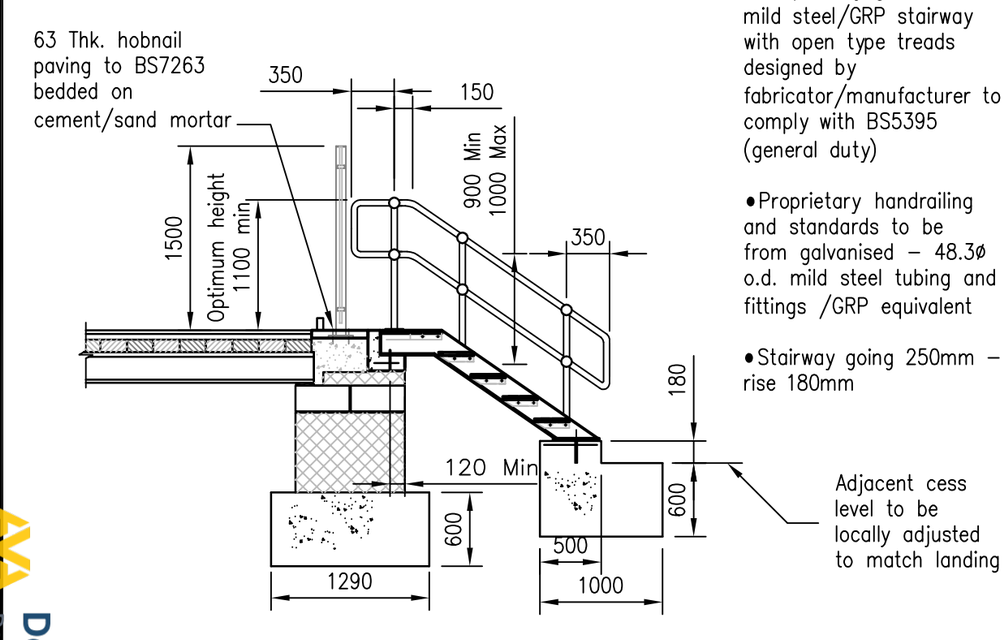

SECTION B–B THROUGH STAIR SUPPORT
Scale 1:50

Stairway spec:–
- Proprietary galvanised mild steel/GRP stairway with open type treads designed by fabricator/manufacturer to comply with BS5395 (general duty)
- Proprietary handrailing and standards to be from galvanised – 48.3ø o.d. mild steel tubing and fittings /GRP equivalent
- Stairway going 250mm – rise 180mm

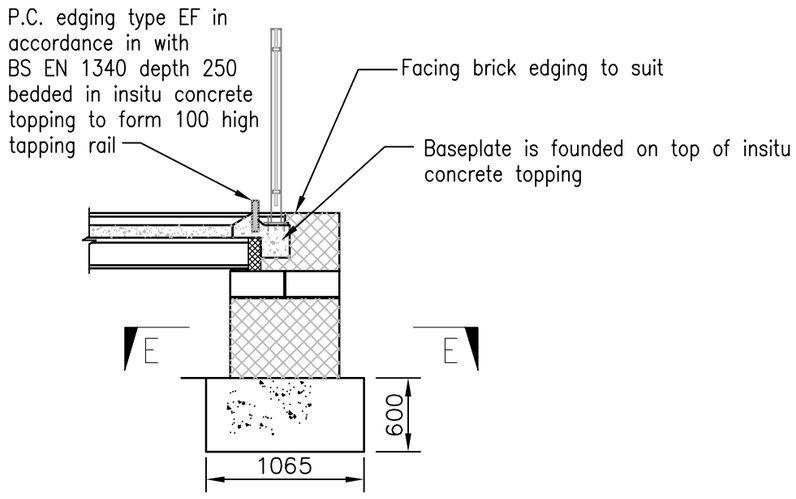

SECTION C–C
Scale 1:50

Rev	Date	Description of revision	Design'd	C'kd
P1				

Network Rail

40 Melton Street
London NW1 2EE

Tel: 020–7557–8000

Approved —		Prog.Eng. Manager Civils, MP & I		
Authorised —		Director of Civil Engineering		
	Name	Position	Signature	Date

Master copy with original signatures held by Network Rail HQ CIVIL ENGINEERING STANDARD DESIGN

© COPYRIGHT NETWORK RAIL 2006

Standard Platform Design

Type 1 Crosswall Platform
Sheet 14 of 15
Plan and Elevation on Platform Stair

Scale	As Shown	
Drawing Number	NR/CIV/SD/3033	P1

Licensee=Weston Williamson/5989497001, User=sam. albett
Not for Resale, 03/28/2016 00:39:27 MDT

Copyright Network Rail
Provided by IHS under license with Network Rail
No reproduction or networking permitted without license from IHS

Documents
Document Sharing Hub