Supplementary Information

The following information is associated with Network Rail Standard:
NR CIV/SD/3043 Rev P1

Additional Content Access

Click the link below to access CAD version of this drawing.

CAD Drawing

- CIV/SD/3043

If you have any questions, or need assistance, please contact **IHS Support**

Information accessed via the links above is the property of the Copyright holder

IHS Additional Content Page

Documents
Document Sharing Hub

Copyright Network Rail
Provided by IHS under license with Network Rail
No reproduction or networking permitted without license from IHS
Full document details: NR NR-CIV-SD-3043 ISSUE P1 2006

Licensee=Weston Williamson/5989497001, User=sam, albett
Not for Resale, 03/28/2016 00:39:17 MDT

Full document details: NR NR-CIV-SD-3043 ISSUE P1 2006

A3

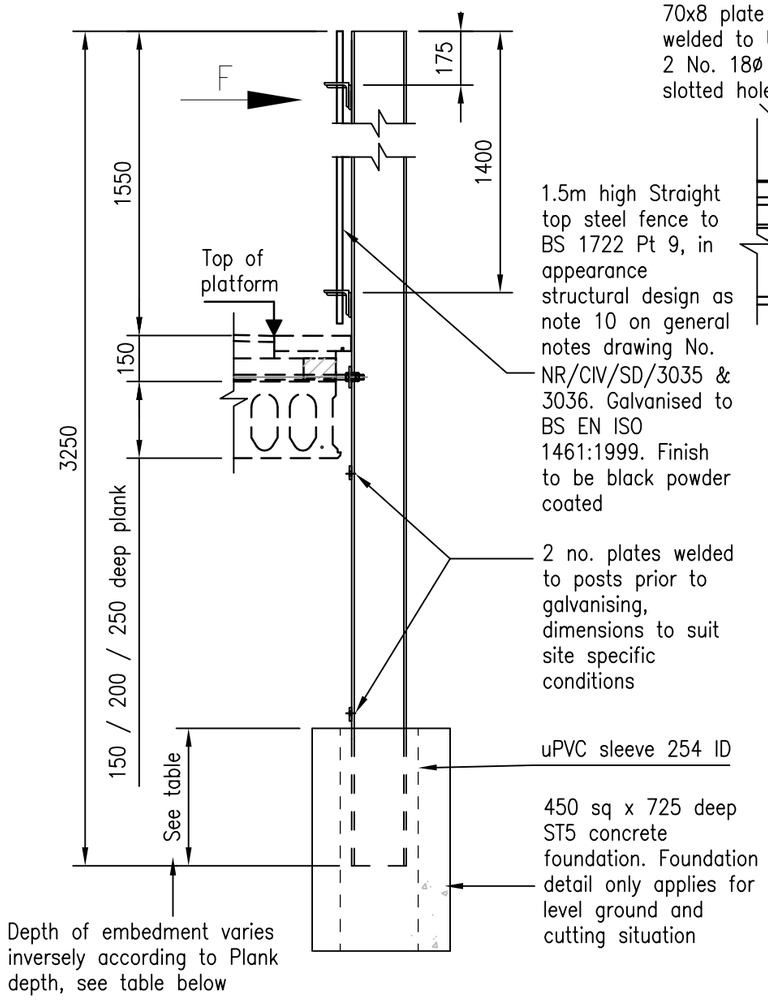

Depth of plank (mm)	150	200	250
Depth of embedment (mm)	510	460	410

INTERMEDIATE FENCE POST FOUNDATION DETAIL
Scale 1:20

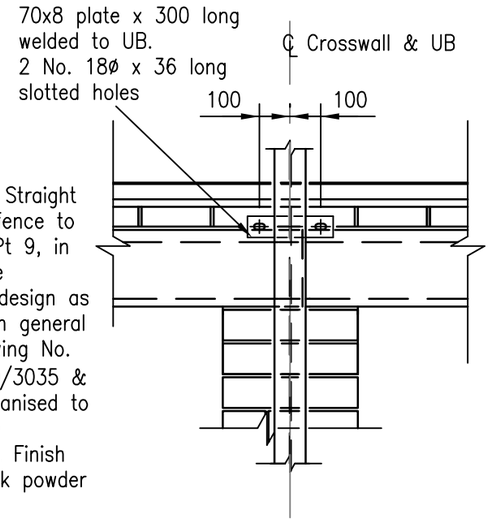

ELEVATION ON ARROW D
Scale 1:20

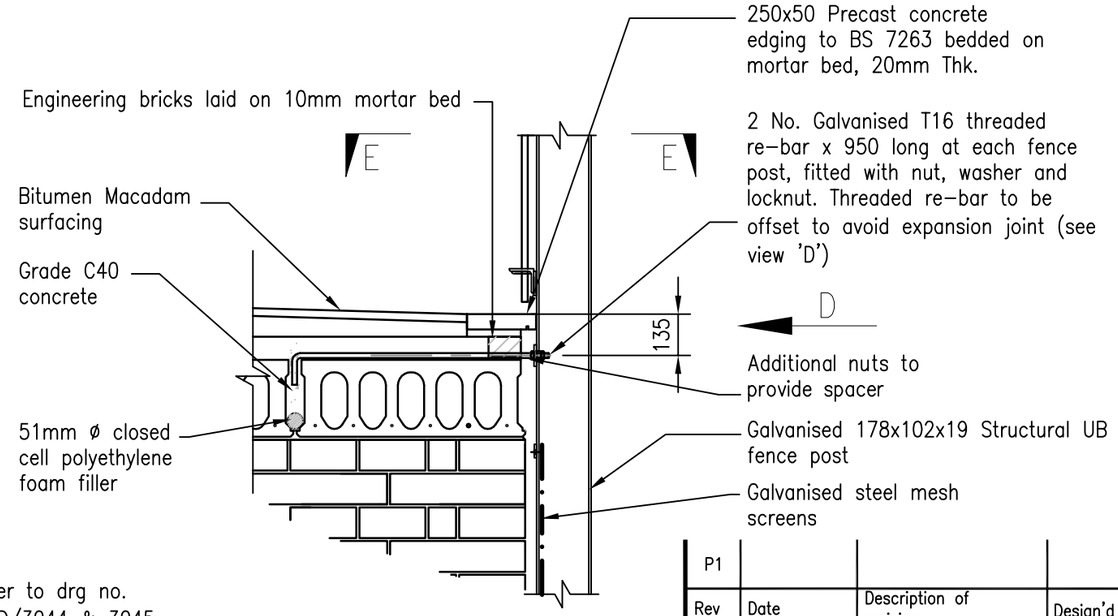

Note: Refer to drg no. NR/CIV/SD/3044 & 3045 for mesh screen details

PLATFORM FENCE POST FIXING AND PLANK JOINT DETAIL
Scale 1:20

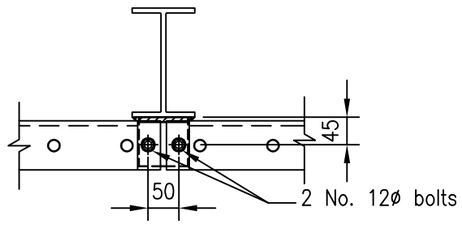

PLAN
Scale 1:10

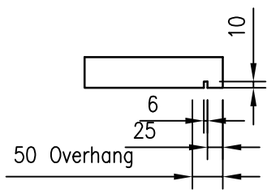

EDGING DETAIL
Scale 1:10

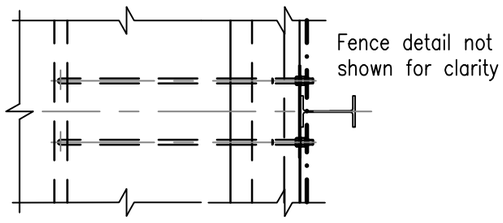

SECTION E-E
Scale 1:20

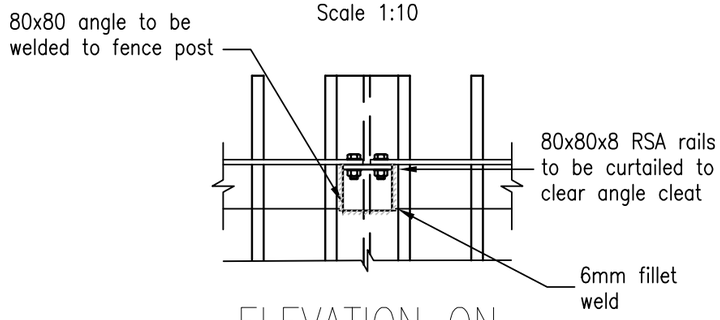

ELEVATION ON ARROW F
Scale 1:10

Rev	Date	Description of revision	Design'd	C'kd
P1				

Network Rail

40 Melton Street
London NW1 2EE

Tel: 020-7557-8000

Approved —		Prog.Eng. Manager Civils, MP & I		
Authorised —		Director of Civil Engineering		
	Name	Position	Signature	Date

Master copy with original signatures held by Network Rail HQ CIVIL ENGINEERING STANDARD DESIGN

© COPYRIGHT NETWORK RAIL 2006

Standard Platform Design

Type 2 Crosswall Platform
Sheet 9 of 14
Fence Details

Scale	As Shown	
Drawing Number	NR/CIV/SD/3043	P1

Licensee=Weston Williamson/5989497001, User=sam, albett
Not for Resale, 03/28/2016 00:39:17 MDT

Documents
Document Sharing Hub

Copyright Network Rail
Provided by IHS under license with Network Rail
No reproduction or networking permitted without license from IHS