Supplementary Information

The following information is associated with Network Rail Standard:
NR CIV/SD/314 Rev C

Additional Content Access

Click the link below to access CAD version of this drawing.

CAD Drawing

- CIV/SD/314

If you have any questions, or need assistance, please contact **IHS Support**

Information accessed via the links above is the property of the Copyright holder

IHS Additional Content Page

Documents
Document Sharing Hub

Copyright Network Rail
Provided by IHS under license with Network Rail
No reproduction or networking permitted without license from IHS
Full document details: NR NR-CIV-SD-314 ISSUE C 2011

Licensee=Weston Williamson/5989497001, User=sam, albett
Not for Resale, 03/27/2016 20:51:17 MDT

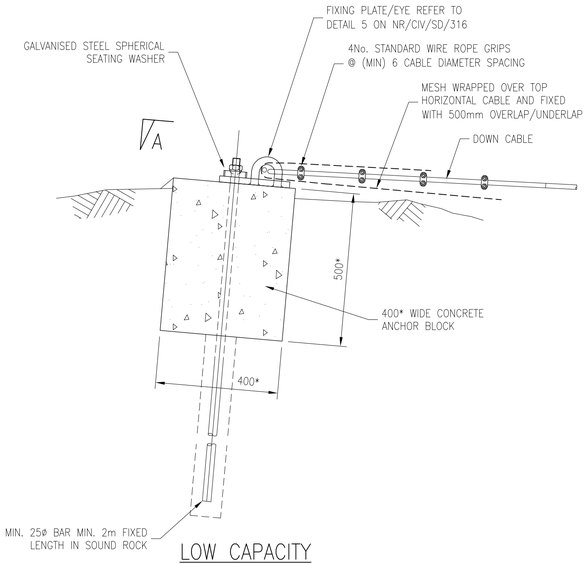

LOW CAPACITY DOWN CABLE TOP END FIXING DETAIL – T1a

SCALE 1:10

DESIGN EXAMPLE FOR AN ANCHORAGE IN A MATERIAL WITH A Cu=150 kN/m² GIVING AN APPROXIMATE WORKING LOAD OF 40 kN.
* DIMENSIONS TO BE CONFIRMED BY SCHEME DESIGNER

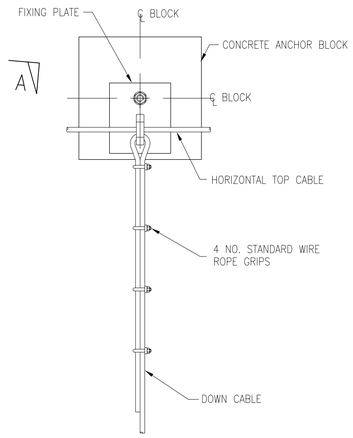

SECTION A–A

(MESH REMOVED FOR CLARITY)
SCALE 1:10

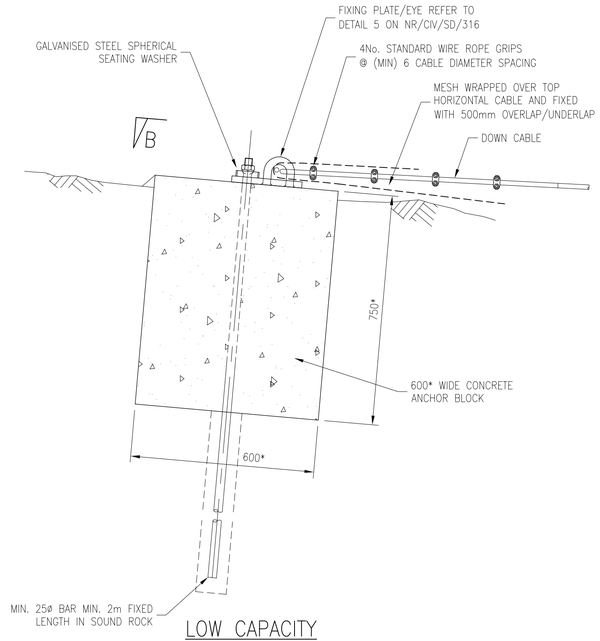

LOW CAPACITY DOWN CABLE TOP END FIXING DETAIL – T1b

SCALE 1:10

DESIGN EXAMPLE FOR AN ANCHORAGE IN A MATERIAL WITH A Cu=150 kN/m² GIVING AN APPROXIMATE WORKING LOAD OF 90 kN.
* DIMENSIONS TO BE CONFIRMED BY SCHEME DESIGNER

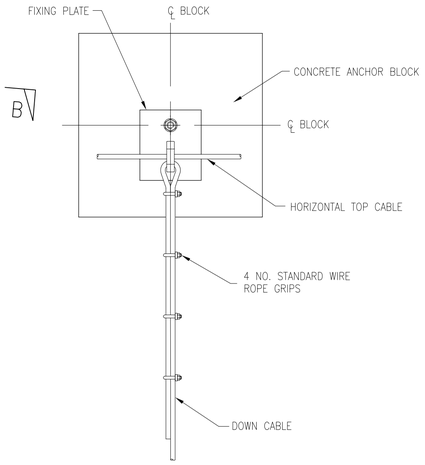

SECTION B–B

(MESH REMOVED FOR CLARITY)
SCALE 1:10

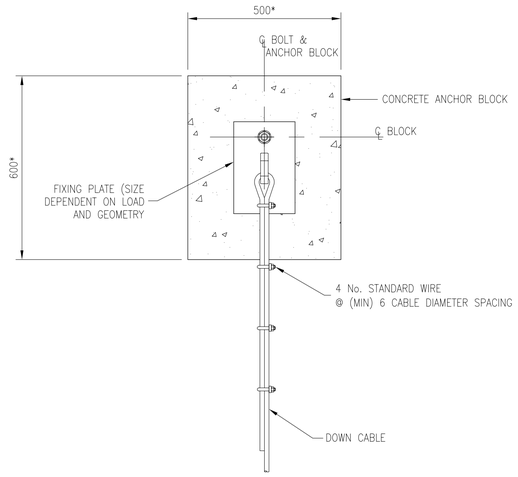

SECTION C–C

(MESH REMOVED FOR CLARITY)
SCALE 1:10

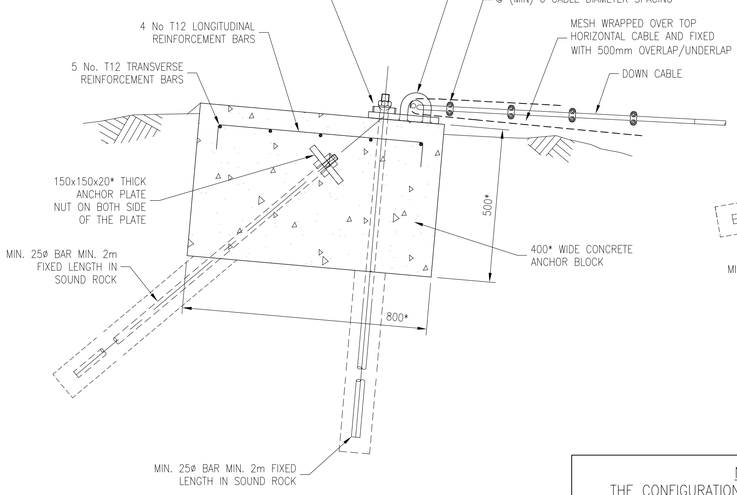

HIGH CAPACITY DOWN CABLE TOP END FIXING DETAIL – T2a

SCALE 1:10

DESIGN EXAMPLE FOR AN ANCHORAGE OF APPROXIMATE WORKING LOAD OF 100 kN.
* DIMENSIONS TO BE CONFIRMED BY SCHEME DESIGNER

NOTE

THE CONFIGURATIONS SHOWN FOR DETAILS T2a & T2b ARE EXAMPLES OF TRIANGULATED ANCHOR SYSTEMS CAPABLE OF RESISTING HIGHER LOADS THAN TYPE T1 FIXINGS AND ARE NOT DEPENDENT ON GOOD GROUND CONDITIONS. THE SCHEME DESIGNER IS TO CARRY OUT APPROPRIATE CALCULATIONS TO DETERMINE THE PARTICULAR CONFIGURATION REQUIRED FOR THE SCHEME.

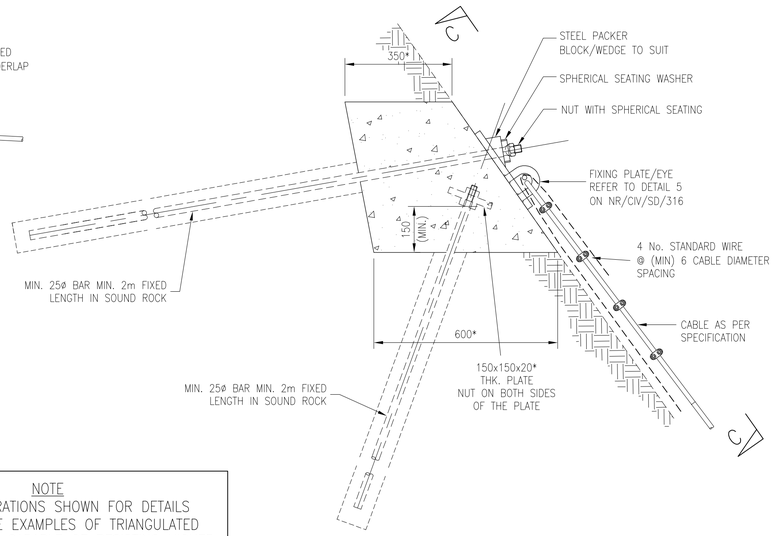

HIGH CAPACITY DOWN CABLE TOP END FIXING DETAIL – T2b

SCALE 1:10

DESIGN EXAMPLE FOR AN ANCHORAGE OF APPROXIMATE WORKING LOAD OF 150 kN.
* DIMENSIONS TO BE CONFIRMED BY SCHEME DESIGNER

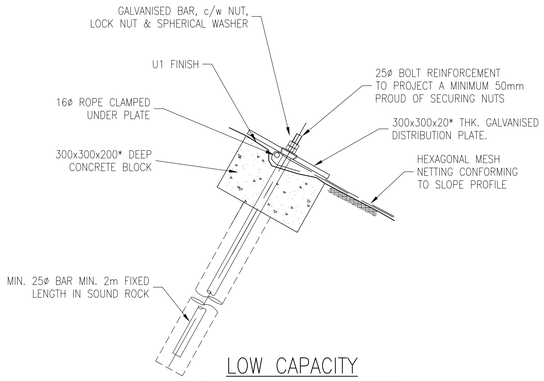

LOW CAPACITY DOWN CABLE TOP END FIXING DETAIL – T3

SCALE 1:10

DRAWING No. NR/CIV/SD/314

NOTES

A GENERAL:

A1 THESE DETAILS APPLY TO TOP ANCHORS FOR NETTING CONFIGURATIONS SHOWN ON DRAWINGS NR/CIV/SD/311–313.

A2 ANCHORAGES SHALL GENERALLY BE INSTALLED NORMAL TO THE SLOPE ANGLE.

A3 ANCHORAGE DIMENSIONS AND ORIENTATION TO BE SPECIFIED IN A PROJECT SPECIFIC FORM A/B.

A4 DIMENSIONS ARE IN MILLIMETRES UNLESS OTHERWISE STATED.

B SPECIFICATION:

B1 REFER TO DRAWING NR/CIV/SD/310.

B2 REFER TO TUM NR/CIV/SD/TUM/301

C DESIGN ASSUMPTIONS:

C1 REFER TO DRAWINGS NR/CIV/SD/311–313.

C2 DETAILS ASSUME THE ROCK BOLTS/DOWELS/ANCHORS ARE FIXED INTO UN–WEATHERED ROCK AND HAVE A MAXIMUM TENSILE PULL OUT CAPACITY OF 150kN. WHERE HOLLOW BAR ANCHORS ARE USED, LARGER DIAMETERS THAN THOSE SHOWN ON THE DETAIL DRAWING MAY BE REQUIRED TO PROVIDE THE CAPACITIES GIVEN.

C3 TYPICAL CAPACITIES ARE SHOWN FOR EACH DETAIL BASED ON PARAMETERS STATED ON THE DETAIL.

C4 THE SCHEME DESIGNER MAY USE PROPRIETARY EYE SOCKET ANCHORAGES OR WIRE ROPE ANCHORAGES WHERE THE PERMANENT AND IMPOSED ACTIONS FROM THE CABLES (INCLUDING ANY ECCENTRICITIES) DO NOT EXCEED THE DESIGN RESISTANCE OF THE ANCHORAGE. THE SCHEME DESIGNER MUST REVIEW THE SUITABILITY OF THESE PROPRIETARY SYSTEMS AND FULLY SPECIFY THE USE OF ANY SYSTEM. CAREFUL CONSIDERATION SHOULD BE GIVEN TO THE GEOMETRY, BENDING OF THE BAR AND THE LIMITATION OF THE ANCHORAGES TO BE LOADED LATERALLY.

D INSTALLATION GUIDANCE:

D1 REFER TO DRAWINGS NR/CIV/SD/311–313.

D2 WHERE POSSIBLE TOP ANCHORS TYPE T1 SHALL BE POSITIONED A MINIMUM 2 METRES FROM THE CREST OF THE SLOPE.

E SAFETY, HEALTH & ENVIRONMENTAL RISK ASSESSMENT:

E1 REFER TO DRAWING NR/CIV/SD/310.

Rev	Date	Description of revision	Design'd	C'kd
C	MAY 2011	THIRD ISSUE	GPR	SWMF
B	19.03.08	SECOND ISSUE	NGAY	NGAY
A	08.08.06	FIRST ISSUE	NGAY	NGAY

Network Rail

Network Rail Infrastructure Ltd. Registered Office: Kings Place, 90 York Way, London, N1 9AG

Approved	P CLARK	Senior Prog. Eng. Manager Investment Projects Building & Civils	PC	MAY 2011
	Name	Position	Signature	Date

Master copy with original signatures held by Network Rail HQ CIVIL ENGINEERING STANDARD DESIGN

© COPYRIGHT NETWORK RAIL 2011

EARTHWORKS

PASSIVE NON–STRESSED NETTING TOP DETAILS

Scale	AS SHOWN
Drawing Number	NR/CIV/SD/314 REV. C

Full document details: NR/NR-CIV-SD-314 ISSUE C 2011
Documents Document Sharing Hub
Licensee:Hidroja Willoughby(0000001002). User:sam. allnet
Copyright Network Rail
Provided by IHS under licence with Network Rail
Reproduced by permission of Network Rail. Not to be reproduced or transferred in any form or medium without permission.