Supplementary Information

The following information is associated with Network Rail Standard:
NR CIV/SD/315 Rev C

Additional Content Access

Click the link below to access CAD version of this drawing.

CAD Drawing

- CIV/SD/315

If you have any questions, or need assistance, please contact **IHS Support**

Information accessed via the links above is the property of the Copyright holder

IHS Additional Content Page

Documents
Document Sharing Hub

Copyright Network Rail
Provided by IHS under license with Network Rail
No reproduction or networking permitted without license from IHS
Full document details: NR NR-CIV-SD-315 ISSUE C 2011

Licensee=Weston Williamson/5989497001, User=sam, albett
Not for Resale, 03/27/2016 20:51:20 MDT

Full document details: NR NR-CIV-SD-315 ISSUE C 2011

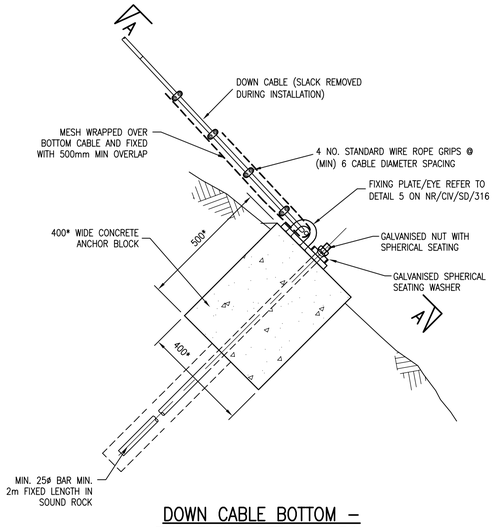

DOWN CABLE BOTTOM – END FIXING DETAIL – B1a

(MESH OMITTED FOR CLARITY)

SCALE 1:10

DESIGN EXAMPLE FOR AN ANCHORAGE IN A MATERIAL WITH A Cu=150 kN/m² GIVING AN APPROXIMATE WORKING LOAD OF 40 kN.
* DIMENSIONS TO BE CONFIRMED BY SCHEME DESIGNER

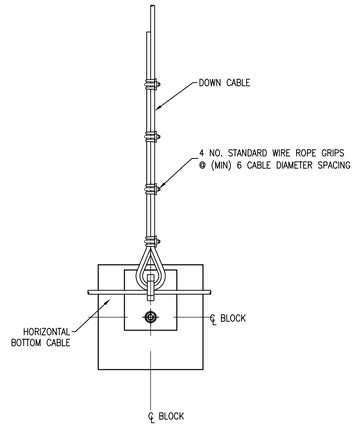

SECTION A–A

(MESH OMITTED FOR CLARITY)

SCALE 1:10

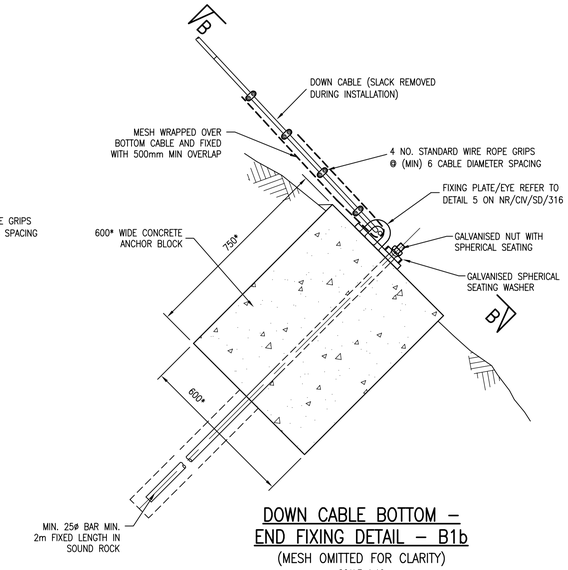

DOWN CABLE BOTTOM – END FIXING DETAIL – B1b

(MESH OMITTED FOR CLARITY)

SCALE 1:10

DESIGN EXAMPLE FOR AN ANCHORAGE IN A MATERIAL WITH A Cu=150 kN/m² GIVING AN APPROXIMATE WORKING LOAD OF 90 kN.
* DIMENSIONS TO BE CONFIRMED BY SCHEME DESIGNER

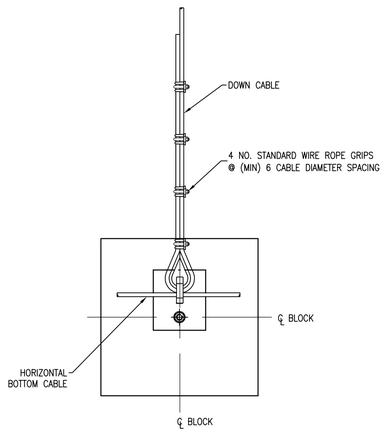

SECTION B–B

(MESH OMITTED FOR CLARITY)

SCALE 1:10

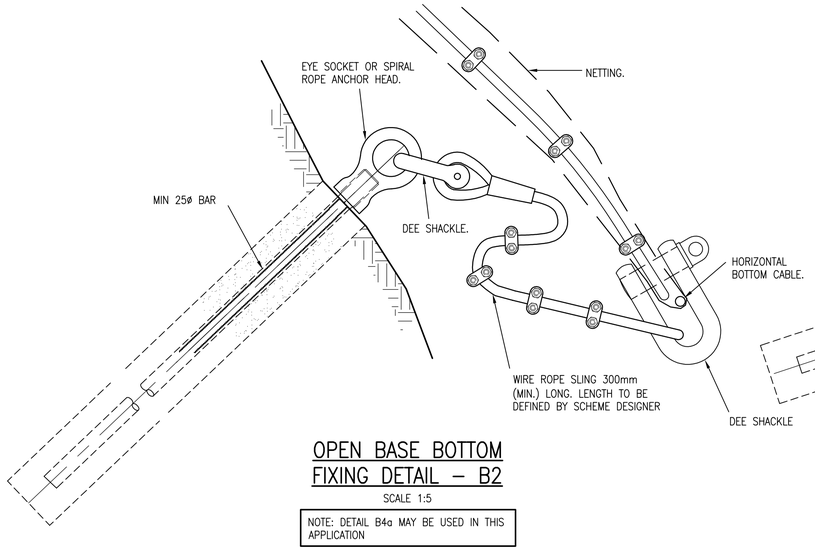

OPEN BASE BOTTOM FIXING DETAIL – B2

SCALE 1:5

NOTE: DETAIL B4a MAY BE USED IN THIS APPLICATION

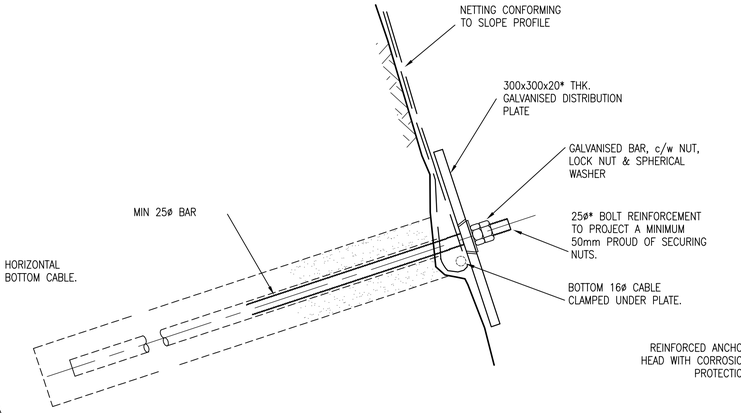

DOWN CABLE BOTTOM FIXING – DETAIL B3

SCALE 1:5

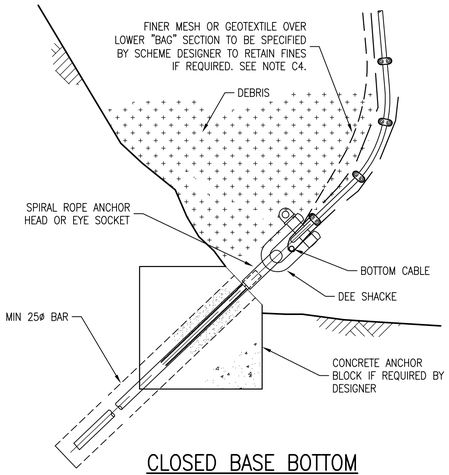

CLOSED BASE BOTTOM FIXING DETAIL – B4a

SCALE 1:10

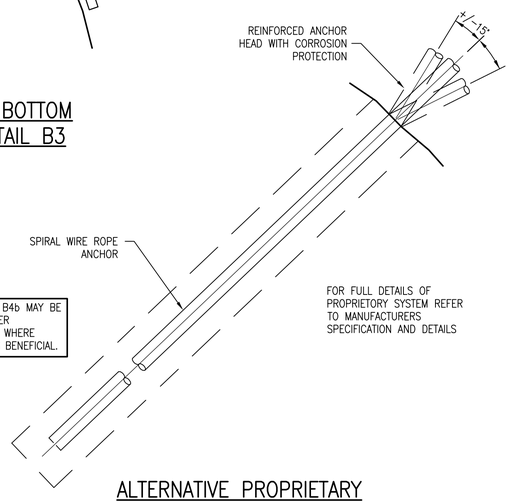

NOTE: DETAIL B4b MAY BE USED IN OTHER APPLICATIONS WHERE FLEXIBILITY IS BENEFICIAL.

ALTERNATIVE PROPRIETARY SPIRAL ROPE SYSTEM DETAIL – B4b

SCALE 1:5

DRAWING No. NR/CIV/SD/315

NOTES

A GENERAL:

A1 THESE DETAILS APPLY TO BOTTOM ANCHORS FOR NETTING CONFIGURATIONS SHOWN ON DRAWINGS NR/CIV/SD/301, 311–313.

A2 ANCHORAGES SHALL GENERALLY BE INSTALLED NORMAL TO THE SLOPE ANGLE.

A3 ANCHORAGE DIMENSIONS AND ORIENTATION TO BE SPECIFIED IN A PROJECT SPECIFIC FORM A/B.

A4 ALL DIMENSIONS ARE IN MILLIMETRES UNLESS OTHERWISE STATED.

B SPECIFICATION:

B1 REFER TO DRAWING NR/CIV/SD/310.

B2 REFER TO TUM NR/CIV/SD/TUM/301

C DESIGN ASSUMPTIONS:

C1 REFER TO DRAWINGS NR/CIV/SD/311–313.

C2 DETAILS ASSUME THAT ANCHORAGES ARE FIXED INTO UNWEATHERED ROCK.

C3 TYPICAL CAPACITIES ARE SHOWN FOR EACH DETAILS BASED ON PARAMETERS STATED ON THE DETAIL.

C4 SCHEME DESIGNER SHOULD CONSIDER THE IMPACT OF FINES RETENTION ON THE DRAINAGE CAPABILITY OF THE DEBRIS AND IF NECESSARY ALLOW FOR HYDRAULIC LOADING IN DERIVING THE DOWN CABLE CAPACITY AND ASSOCIATED TOP ANCHORAGES.

C5 THE SCHEME DESIGNER MAY USE PROPRIETARY EYE SOCKET ANCHORAGES OR WIRE ROPE ANCHORAGES WHERE THE PERMANENT AND IMPOSED ACTIONS FROM THE CABLES (INCLUDING ANY ECCENTRICITIES) DO NOT EXCEED THE DESIGN RESISTANCE OF THE ANCHORAGE. THE SCHEME DESIGNER MUST REVIEW THE SUITABILITY OF THESE PROPRIETARY SYSTEMS AND FULLY SPECIFY THE USE OF ANY SYSTEM. CAREFUL CONSIDERATION SHOULD BE GIVEN TO THE GEOMETRY, BENDING OF THE BAR AND THE LIMITATION OF THE ANCHORAGES TO BE LOADED LATERALLY.

D INSTALLATION GUIDANCE:

D1 REFER TO DRAWINGS NR/CIV/SD/301, 311–313.

E SAFETY, HEALTH & ENVIRONMENTAL RISK ASSESSMENT:

E1 REFER TO DRAWING NR/CIV/SD/310.

Rev	Date	Description of revision	Design'd	C'kd
C	MAY 2011	THIRD ISSUE	GPR	SWMF
B	19.03.08	SECOND ISSUE	NGAY	NGAY
A	08.08.06	FIRST ISSUE	NGAY	NGAY

Network Rail

Network Rail Infrastructure Ltd. Registered Office: Kings Place, 90 York Way, London, N1 9AG

Approved	P CLARK	Senior Prog. Eng. Manager Investment Projects Building & Civils	PC	MAY 2011
	Name	Position	Signature	Date

Master copy with original signatures held by Network Rail HQ CIVIL ENGINEERING STANDARD DESIGN

© COPYRIGHT NETWORK RAIL 2011

EARTHWORKS

PASSIVE NON–STRESSED NETTING BASE DETAILS

Scale	AS SHOWN	
Drawing Number	NR/CIV/SD/315	REV. C

Documents Document Sharing Hub

Licensee:Morgan Williams(uk0058961002) User:sam. allnett 18-Nov-2011 08:00:00 Copyright Network Rail Provided by IHS under licence with Network Rail Reproduced by permission of the Controller of HMSO and/or licence from IHS