Supplementary Information

The following information is associated with Network Rail Standard:
NR CIV/SD/322 Rev D

Additional Content Access

Click the link below to access CAD version of this drawing.

CAD Drawing

- CIV/SD/322

If you have any questions, or need assistance, please contact **IHS Support**

Information accessed via the links above is the property of the Copyright holder

IHS Additional Content Page

--`,,,,,,`,,,,,,`,,`,,,,,,,,`-`-`,,`,,`,`,,`---

Documents
Document Sharing Hub

Copyright Network Rail
Provided by IHS under license with Network Rail
No reproduction or networking permitted without license from IHS
Full document details: NR NR-CIV-SD-322 ISSUE D 2011

Licensee=Weston Williamson/5989497001, User=sam, albett
Not for Resale, 03/27/2016 20:53:02 MDT

Full document details: NR NR-CIV-SD-322 ISSUE D 2011

COLLECTOR PIPES P1, P2 & P3

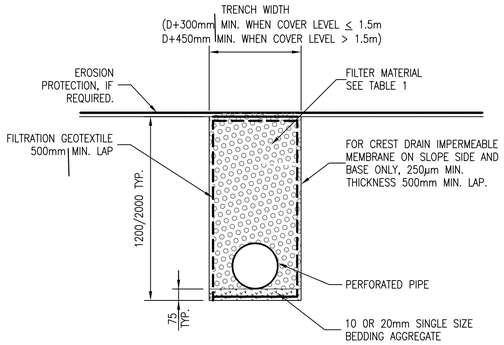

PIPE DETAIL P1
(STANDARD PERFORATED PIPE)
SCALE 1:20

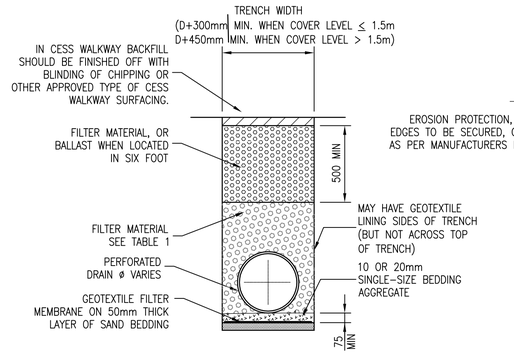

PIPE DETAIL P2
(STRONGER PERFORATED PIPE)
SCALE 1:20

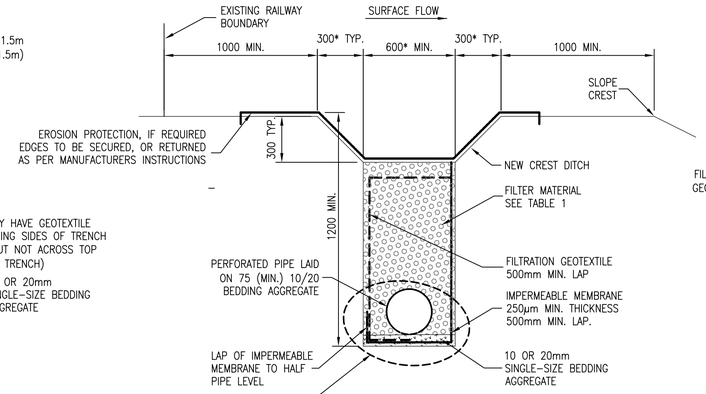

PIPE DETAIL P3
(COMBINED PIPE AND DITCH)
SCALE 1:20

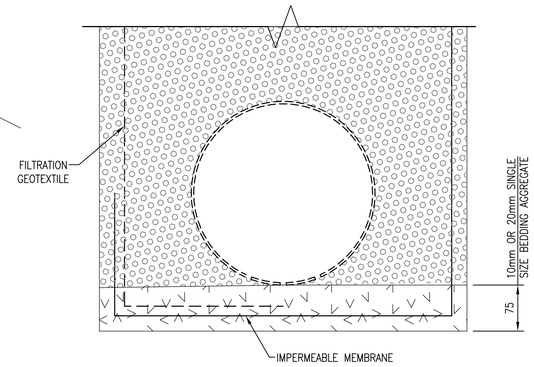

DETAIL '1' SHOWING BEDDING AGGREGATE PIPE P3 (PIPE P1 & P2 SIMILAR)
SCALE 1:5

KEY

- SINGLE SIZED BEDDING MATERIAL (SEE TABLE 1 & CL 181–007)
- SELECTED BACKFILL MATERIAL (SEE CL 181–008)
- FILTER MATERIAL (SEE TABLE 1)
- FILTER MATERIAL OR BALLAST (SEE TABLE 1)

TABLE 1 – REQUIREMENTS FOR PIPE BEDDING AND FILTER MATERIALS
(FROM NR/L3/CIV/005/2E, TABLE 2E.1)

PIPE NOMINAL SIZE (DN)	AGGREGATE TO BS 12620
<140	10mm NOMINAL SINGLE–SIZE
140 TO 400	10, 14 OR 20mm NOMINAL SINGLE–SIZE OR 14 TO 5mm GRADED OR 20 TO 5mm GRADED
>400	10, 14, 20 OR 40mm NOMINAL SINGLE–SIZE OR 14 TO 5 GRADED OR 20 TO 5 GRADED OF 40 TO 5 GRADED

OR IN ACCORDANCE WITH PIPE MANUFACTURES BEDDING SPECIFICATION

CARRIER PIPES P4 & P5

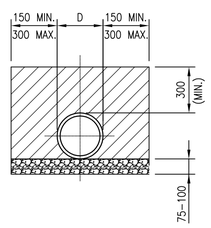

PIPE DETAIL P4
(STANDARD NON–PERFORATED PIPE)
SCALE 1:20

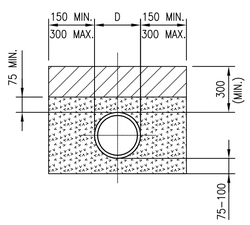

PIPE DETAIL P5
(STRONGER NON–PERFORATED PIPE)
SCALE 1:20

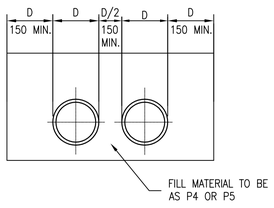

TWIN PIPE CONFIGURATION
(ALL CLASSES)
SCALE 1:20

KEY

- GRADED GRANULAR BEDDING MATERIAL (SEE TABLE 1 & CL 181–007)
- SINGLE SIZED BEDDING MATERIAL (SEE TABLE 1 & CL 181–007)
- SELECTED BACKFILL MATERIAL (SEE CL 181–008)

CHANNEL CH1

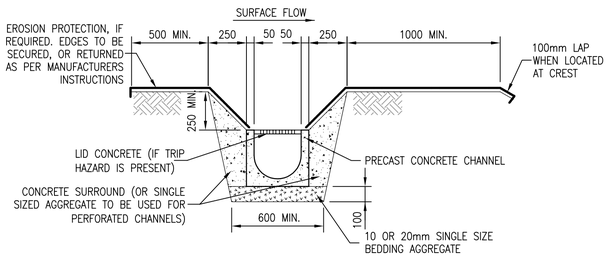

CHANNEL DETAIL CH1
(STANDARD CHANNEL)
SCALE 1:20

KEY

- IN SITU CONCRETE/ PRECAST CONCRETE
- SINGLE SIZED BEDDING MATERIAL (SEE TABLE 1 & CL 181–007)

DITCH D1

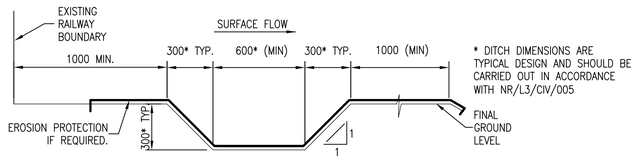

DITCH DETAIL D1
(STANDARD DITCH)
SCALE 1:20

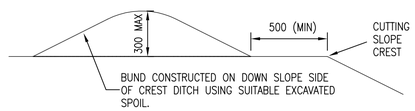

EARTH BUND DETAIL (IF REQUIRED)
SCALE 1:20

DRAWING No. NR/CIV/SD/322

NOTES

GENERAL NOTES

1. ALL DIMENSIONS ARE IN MILLIMETRES U.N.O.
2. FOR GENERAL NOTES REFER TO DRAWING NR/CIV/SD/320.
3. NO SPOIL FROM DRAIN EXCAVATION TO BE PLACED WITHIN 500mm OF TOP OF CUTTING CREST ON EARTHWORK SLOPE.
4. WHERE PRACTICABLE THE DRAIN SHALL HAVE A SELF CLEANING VELOCITY, IN ACCORDANCE WITH NR/L3/CIV/005, TABLE 2C.6.
5. DEPTH TO PIPE INVERT TO BE VARIED TO SUIT SPECIFIED GRADIENT. (ASSUMED LINEAR RELATIONSHIP BETWEEN STANDARD PIPE DIAMETERS AND MINIMUM GRADIENTS).
6. TRENCH WIDTHS SPECIFIED ARE MINIMUM/MAXIMUM REQUIREMENTS, DESIGNER TO CONSIDER PROPOSED CONSTRUCTION METHOD AND AVAILABLE SIZE OF EXCAVATOR BUCKET.
7. DRAINS IN THE CESS SHOULD BE LAID AT A CONSTANT DISTANCE FROM THE NEAREST RAIL AND WHERE PRACTICABLE THE CENTRELINE OF THE PIPES SHOULD BE A MINIMUM OF 1730mm FROM THE RUNNING RAIL. CATCHPITS SHOULD ALWAYS BE A MINIMUM OF 1410mm FROM THE NEAREST RUNNING RAIL AS PER DRAWING No. NR/CIV/SD/350.

RISK ASSESSMENT

8. SEE DRAWING NR/CIV/SD/320 TABLE 1

INSTALLATION GUIDANCE

9. REFERENCE SHOULD BE MADE TO NR/L3/CIV/140 SECTION 181 AND 182 CLAUSE 182.001 TO 182.007 FOR INSTALLATION REQUIREMENTS.
10. DRAIN LAYING AND BACKFILLING SHOULD FOLLOW AS CLOSELY BEHIND THE EXCAVATION AS PRACTICABLE.
11. INLET END OF ALL SUBSOIL DRAINAGE PIPES TO BE SEALED WITH A PLUG OF NO–FINES CONCRETE OR SECURED FILTER CLOTH CAP.
12. THE SUBSOIL DRAIN OUTLET PIPE SHALL BE CONNECTED TO THE OUTLET CHAMBER USING AN APPROVED FITTING.
13. ALL PIPE JOINTS TO BE SEALED AND MADE SECURE.
14. FOR POSITIONS AND DETAILS OF CHAMBERS SEE DRAWING NR/CIV/SD/351.
15. ALL PIPES TO BE LAID IN ACCORDANCE WITH MANUFACTURERS GUIDELINES.
16. FOR GRANULAR BEDS, WHERE APPROPRIATE GEOTEXTILES MAY BE USED TO CONTAIN BEDDING MATERIAL E.G. IN RUNNING SAND.

DESIGN ASSUMPTIONS

17. THE MAXIMUM TOTAL EXTERNAL LOAD ON THE PIPELINE MUST NOT EXCEED THE MINIMUM VALUE OF THE PIPE STRENGTH MULTIPLIED BY THE APPROPRIATE VALUE OF THE BEDDING FACTOR AND DIVIDED BY A SUITABLE DESIGN FACTOR OF SAFETY (TYPICALLY 1.25).

SPECIFICATIONS

18. SEE DRAWING NR/CIV/SD/320.

Rev	Date	Description of revision	Design'd	C'kd
D	MAY 2011	THIRD ISSUE	GPR	SWMF
C	18.04.08	SECOND ISSUE	GPR	NGAY
B	25.05.07	REVISED FORM B	HCHS	NGAY
A	08.08.06	FIRST ISSUE	TWHS	NGAY

Network Rail

Network Rail Infrastructure Ltd. Registered Office: Kings Place, 90 York Way, London, N1 9AG

Approved	P CLARK	Senior Prog. Eng. Manager Investment Projects Building & Civils	PC	MAY 2011
	Name	Position	Signature	Date

Master copy with original signatures held by Network Rail HQ CIVIL ENGINEERING STANDARD DESIGN

© COPYRIGHT NETWORK RAIL 2010

DRAINAGE SYSTEMS (TRACK AND OFF TRACK)

PIPES, CHANNEL & DITCH STANDARD DETAILS P1–P5, CH1 & D1.

Scale	AS SHOWN
Drawing Number	NR/CIV/SD/322
REV.	D

AVA Documents Document Sharing Hub

Licensee:nelson.wilson.uk:2559/1001, User:sam. elliott Wednesday, 04 May 2011 08:42:00 Copyright Network Rail Provided by IHS under licence with Network Rail No reproduction or networking permitted without licence from IHS