Supplementary Information

The following information is associated with Network Rail Standard:
NR CIV/SD/323 Rev D

Additional Content Access

Click the link below to access CAD version of this drawing.

CAD Drawing

- CIV/SD/323

If you have any questions, or need assistance, please contact **IHS Support**

Information accessed via the links above is the property of the Copyright holder

IHS Additional Content Page

Documents
Document Sharing Hub

Copyright Network Rail
Provided by IHS under license with Network Rail
No reproduction or networking permitted without license from IHS
Full document details: NR NR-CIV-SD-323 ISSUE D 2011

Licensee=Weston Williamson/5989497001, User=sam, albett
Not for Resale, 03/27/2016 20:52:29 MDT

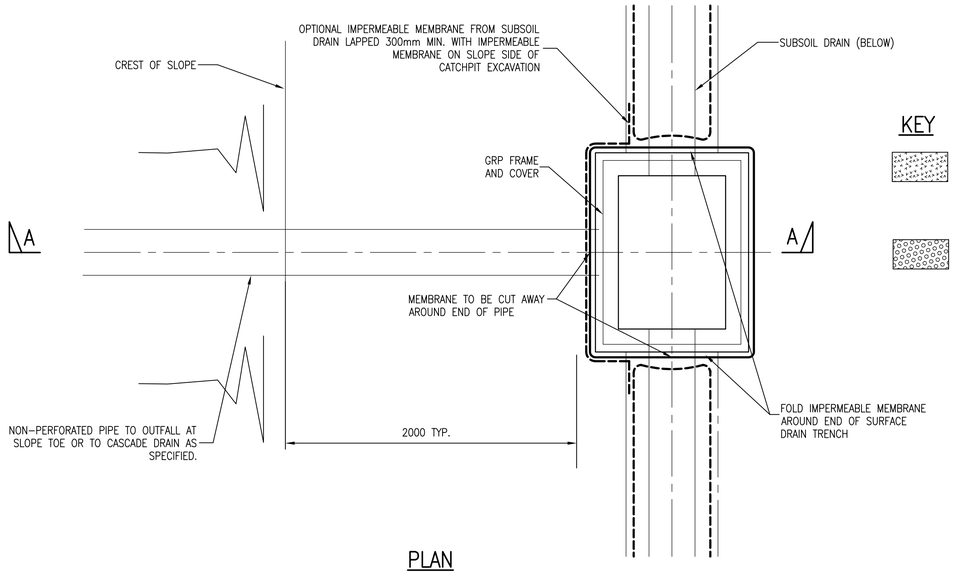

PLAN
OUTLET FROM CREST PIPE DETAIL P1 TO SLOPE
SCALE 1:20

KEY

- SINGLE SIZED BEDDING MATERIAL (SEE TABLE 1 & CL 181-007)
- SELECTED BACKFILL MATERIAL (SEE CL 181-008)
- FILTER MATERIAL (SEE TABLE 1)
- BRICK OR DRESSED STONE
- CONCRETE (OR MORTARED STONE)

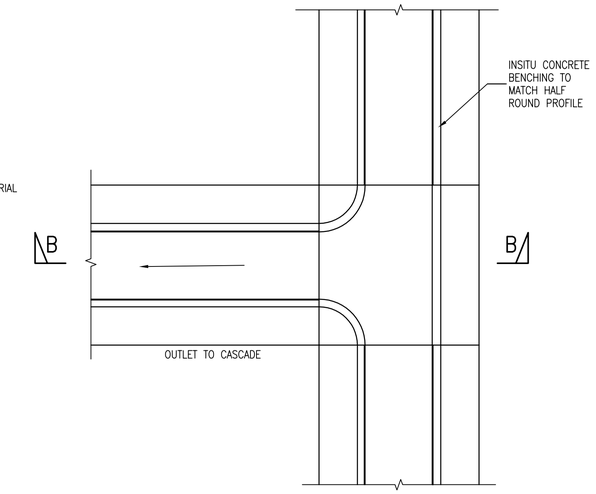

PLAN
SCALE 1:20

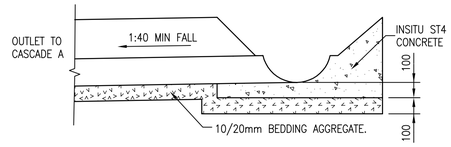

SECTION B-B
SCALE 1:20

STANDARD OUTFALL DETAIL FROM CHANNEL CH1 TO CASCADE DRAIN

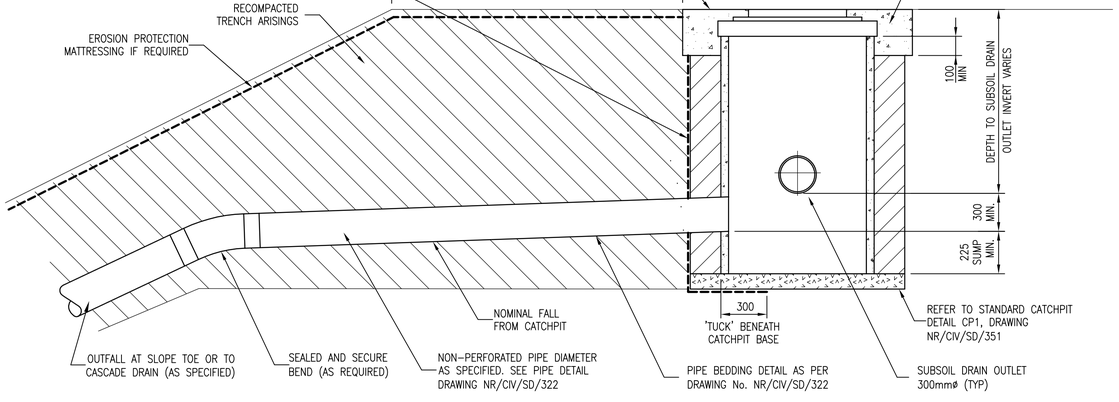

SECTION A-A
SCALE 1:20

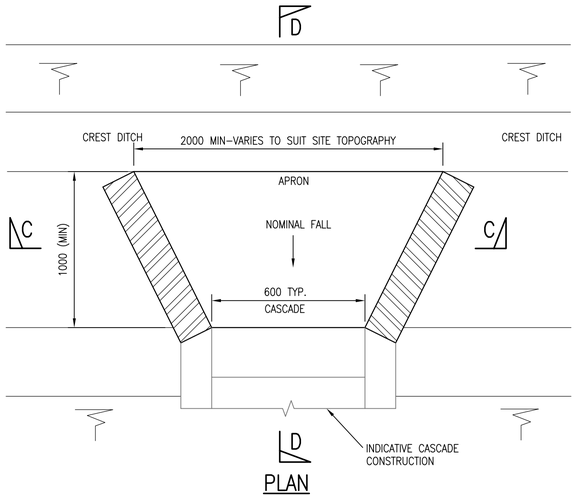

PLAN
SCALE 1:20

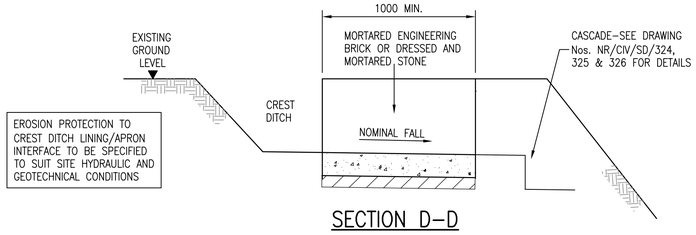

SECTION D-D
SCALE 1:20

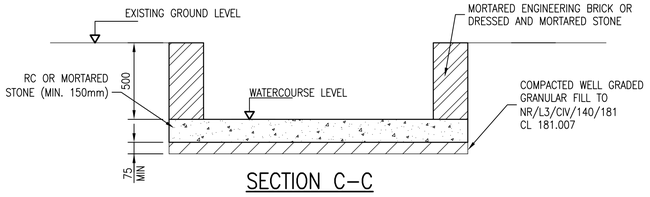

SECTION C-C
OUTLET FROM DITCH DETAIL D1 TO CASCADE DRAIN
SCALE 1:20

DRAWING No. NR/CIV/SD/323

NOTES

GENERAL NOTES

1. ALL DIMENSIONS ARE IN MILLIMETRES U.N.O.
2. FOR GENERAL NOTES REFER TO DRAWING NR/CIV/SD/320.
3. REFER TO DRAWING NR/CIV/SD/351 FOR STANDARD CATCHPIT DETAILS.

INSTALLATION GUIDANCE

4. TRENCH FOR OUTFALL PIPE TO BE 300mm WIDER THAN OUTSIDE DIAMETER OF OUTFALL PIPE.

DESIGN ASSUMPTIONS

5. NONE

RISK ASSESSMENT

6. SEE DRAWING NR/CIV/SD/320 TABLE 1

SPECIFICATION

7. SEE DRAWING NR/CIV/SD/320.

Rev	Date	Description of revision	Design'd	C'kd
D	MAY 2011	THIRD ISSUE	GPR	SWMF
C	18.04.08	SECOND ISSUE	GPR	NGAY
B	25.05.07	REVISED FORM B	HCHS	NGAY
A	08.08.06	FIRST ISSUE	TWHS	NGAY

Network Rail

Network Rail Infrastructure Ltd. Registered Office: Kings Place, 90 York Way, London, N1 9AG

Approved	P CLARK	Senior Prog. Eng. Manager Investment Projects Building & Civils	PC	MAY 2011
	Name	Position	Signature	Date

Master copy with original signatures held by Network Rail HQ CIVIL ENGINEERING STANDARD DESIGN

© COPYRIGHT NETWORK RAIL 2010

DRAINAGE SYSTEMS (TRACK AND OFF TRACK)

CREST DRAIN OUTFALL STANDARD DETAILS

Scale	AS SHOWN	
Drawing Number	NR/CIV/SD/323	REV. D

Full document details: NR/NR-CIV-SD-323 ISSUE D 2011
Documents Document Sharing Hub
Copyright Network Rail
Provided by IHS under licence with Network Rail
Licensee=Wilson Williamson/9999999999, User=sam, allnet
No reproduction or networking permitted without licence from IHS