Supplementary Information

The following information is associated with Network Rail Standard:
NR CIV/SD/324 Rev D

Additional Content Access

Click the link below to access CAD version of this drawing.

CAD Drawing

- CIV/SD/324

If you have any questions, or need assistance, please contact **IHS Support**

Information accessed via the links above is the property of the Copyright holder

IHS Additional Content Page

--`,,,,,,`,,,,,,`,,`,,,,,,,,`-`-`,,`,,`,`,,`---

Documents
Document Sharing Hub

Copyright Network Rail
Provided by IHS under license with Network Rail
No reproduction or networking permitted without license from IHS
Full document details: NR NR-CIV-SD-324 ISSUE D 2011

Licensee=Weston Williamson/5989497001, User=sam, albett
Not for Resale, 03/27/2016 20:52:41 MDT

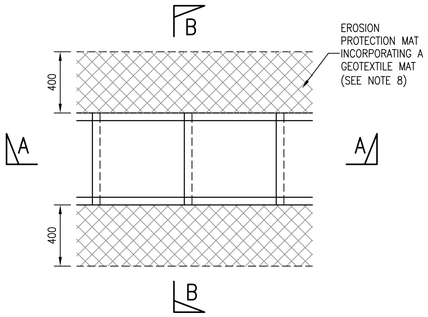

TYPICAL PLAN
SCALE 1:20

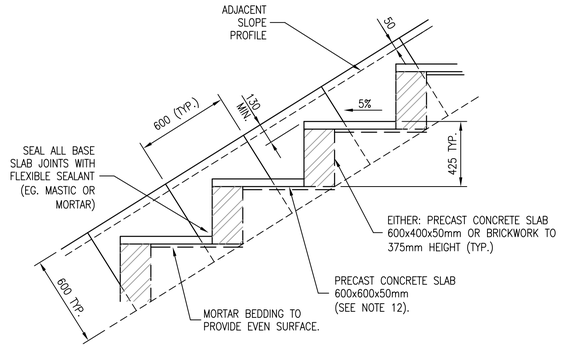

SECTION A–A
SCALE 1:20

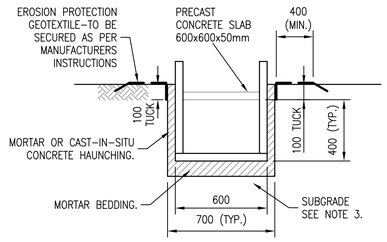

SECTION B–B
SCALE 1:20

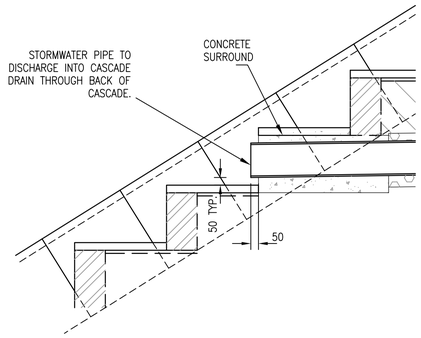

OUTFALL INTO CASCADE DRAIN
SCALE 1:20

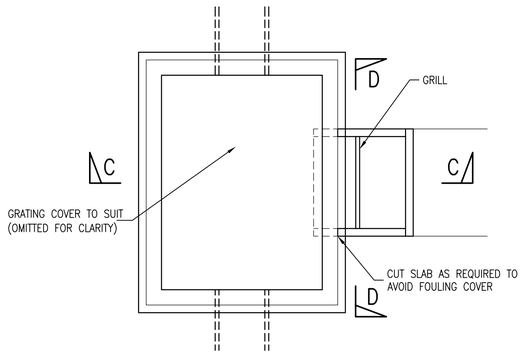

PLAN ON TOE OUTFALL
SCALE 1:20

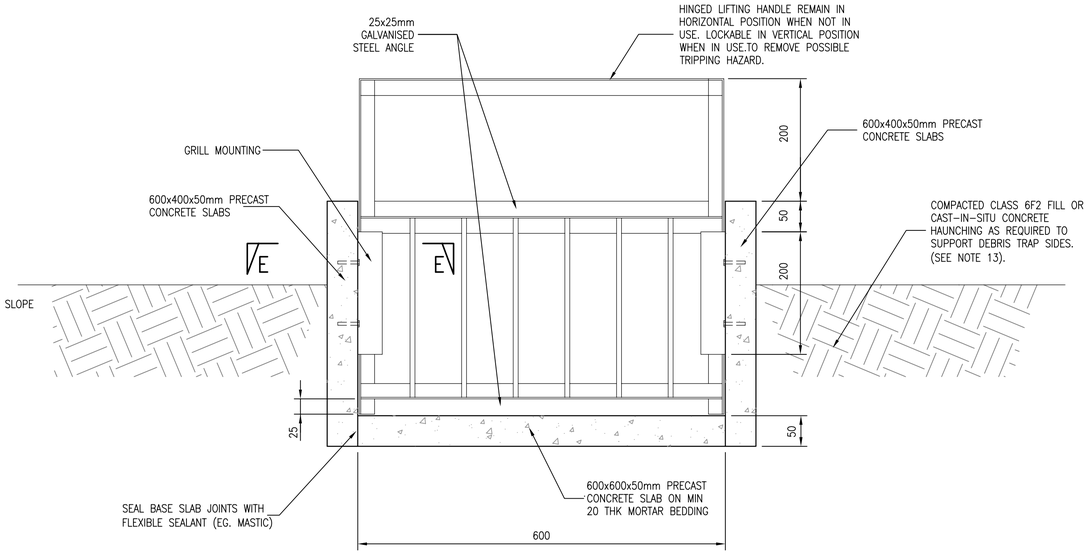

SECTION D–D
SCALE 1:5

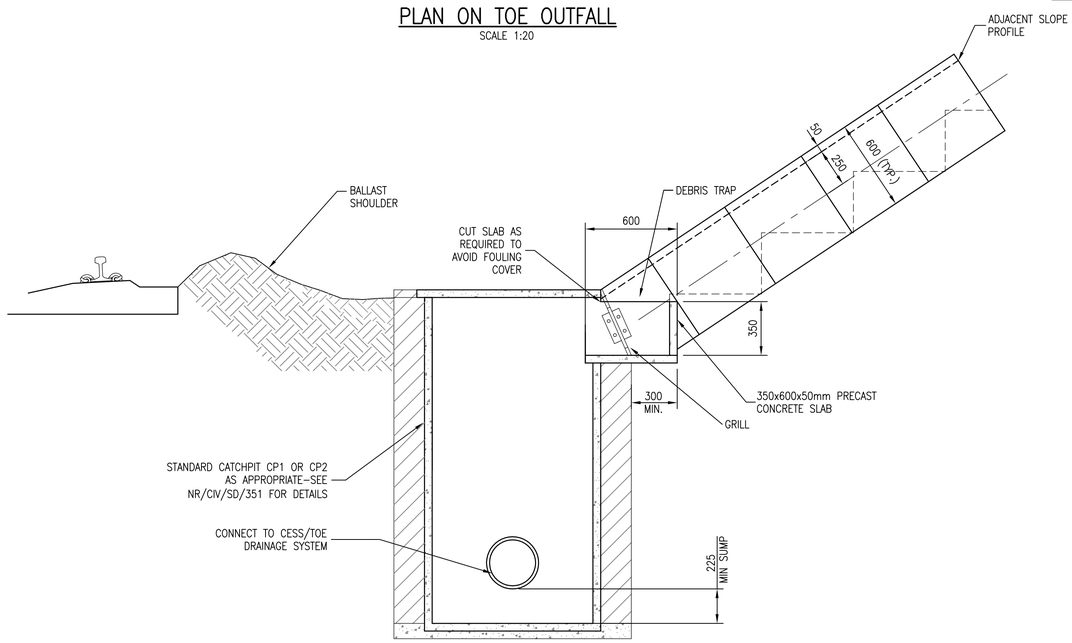

SECTION C–C
SCALE 1:20

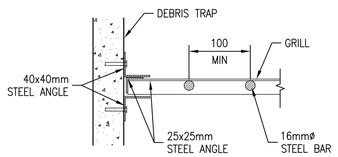

SECTION E–E
(GRILL MOUNTING)
SCALE 1:5

DRAWING No. NR/CIV/SD/324

NOTES

GENERAL NOTES

1. ALL DIMENSIONS ARE IN MILLIMETRES U.N.O.
2. FOR GENERAL NOTES REFER TO DRAWING NR/CIV/SD/320.
3. FORMATION FOR ALL STRUCTURES TO BE COMPETENT NATURAL GROUND OR ENGINEERED FILL. UNSUITABLE MATERIAL TO BE EXCAVATED AND REPLACED WITH EITHER APPROVED COMPACTED GRANULAR MATERIAL OR CAST–INSITU CONCRETE.
4. SLOPE PROFILES SHOWN INDICATIVELY. REFER TO STANDARD CIVILS ASSOCIATED DRAINAGE DETAIL DRAWING NR/CIV/SD/351 FOR STANDARD CATCHPIT DETAILS.

INSTALLATION GUIDANCE

5. JOINTS IN HALF–ROUND PLASTIC PIPE TO BE SEALED WITH FLEXIBLE SEALANT (EG.MASTIC) AS REQUIRED TO PREVENT LEAKAGE.
6. INLET END OF ALL SUBSOIL DRAINAGE PIPES TO BE SEALED WITH A PLUG OF NO–FINES CONCRETE OR SECURED FILTER CLOTH CAP.
7. CASCADE TO BE CONSTRUCTED:
   a) FOLLOWING SLOPE PROFILE (SLOPE ANGLES ≤ 1V:3H)
   b) STEPPED/BENCHED IN 300mm HIGH BENCHES (1V:2H > SLOPE ANGLE > 1V:3H)
   c) NOT TO BE CONSTRUCTED ON SLOPES > 1V:2H (FOR CASCADE DRAIN TYPE CD3)
8. ALL GEOTEXTILES/EROSION PROTECTION TO BE SECURED IN ACCORDANCE WITH MANUFACTURER'S INSTRUCTIONS.

DESIGN ASSUMPTIONS

9. NONE

RISK ASSESSMENT

10. SEE DRAWING NR/CIV/SD/320 TABLE 1

SPECIFICATIONS

11. SEE DWG NR/CIV/SD/320

CONCRETE

12. ALL CONCRETE TO COMPLY WITH BS8500 PRECAST CONCRETE SHALL HAVE A MINIMUM 28 DAY COMPRESSIVE CUBE STRENGTH OF 20 MPA CAST INSITU CONCRETE TO BE MIX ST2 OF SUMP CLASS S1/S2. (50mm NOMINAL UNLESS STATED OTHERWISE)

AGGREGATES AND FILL

13. TRACK DRAINAGE AGGREGATES AND FILL TO COMPLY WITH TABLE 185/2 FROM NR/GN/CIV/008/185.

Rev	Date	Description of revision	Design'd	C'kd
D	MAY 2011	THIRD ISSUE	GPR	SWMF
C	18.04.08	SECOND ISSUE	GPR	NGAY
B	25.05.07	REVISED FORM B	HCHS	NGAY
A	08.08.06	FIRST ISSUE	TWHS	NGAY

Network Rail

Network Rail Infrastructure Ltd. Registered Office: Kings Place, 90 York Way, London, N1 9AG

Approved	P CLARK	Senior Prog. Eng. Manager Investment Projects Building & Civils	PC	MAY 2011
	Name	Position	Signature	Date

Master copy with original signatures held by Network Rail HQ CIVIL ENGINEERING STANDARD DESIGN

© COPYRIGHT NETWORK RAIL 2010

DRAINAGE SYSTEMS (TRACK AND OFF TRACK)

CASCADE DRAIN STANDARD DETAIL CD1 BENCHED SLOPE DRAIN

Scale	AS SHOWN	
Drawing Number	NR/CIV/SD/324	REV. D

Full document details: NR NR-CIV-SD-324 ISSUE D 2011
Documents Document Sharing Hub
Licensee=Atkinson Wilkinson 2005854/001, User=sam, allen
Not for resale
Copyright Network Rail
Provided by IHS under licence with Network Rail
No reproduction or distribution permitted without prior licence from IHS