The following information is associated with Network Rail Standard:
NR CIV/SD/325 Rev D

Additional Content Access

Click the link below to access CAD version of this drawing.

CAD Drawing

- CIV/SD/325

If you have any questions, or need assistance, please contact **IHS Support**

Information accessed via the links above is the property of the Copyright holder

IHS Additional Content Page

Documents
Document Sharing Hub

--`,,,,,,`,,,,,,`,,`,,,,,,,,`-`-`,,`,,`,`,,`---
Copyright Network Rail
Provided by IHS under license with Network Rail
No reproduction or networking permitted without license from IHS
Full document details: NR NR-CIV-SD-325 ISSUE D 2011

Licensee=Weston Williamson/5989497001, User=sam, albett
Not for Resale, 03/27/2016 20:53:29 MDT

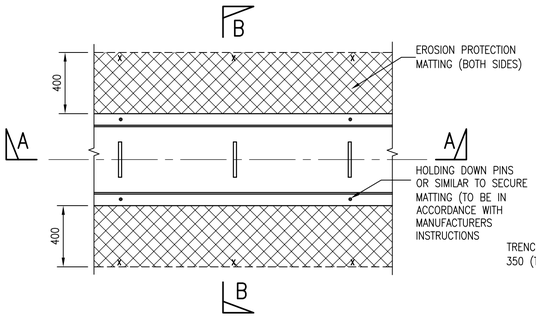

PLAN
SCALE 1:20

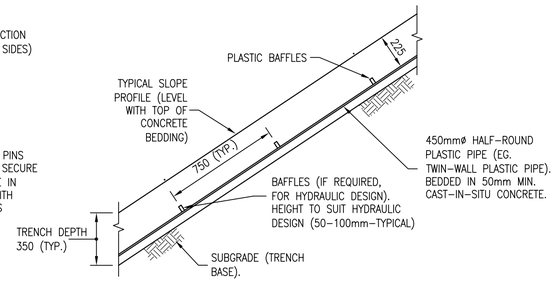

SECTION A–A
SCALE 1:20

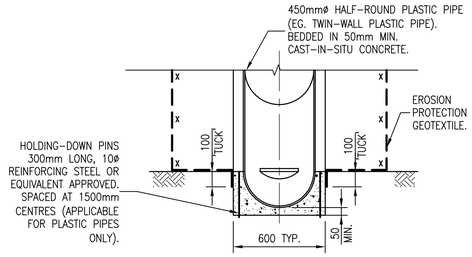

SECTION B–B
SCALE 1:20

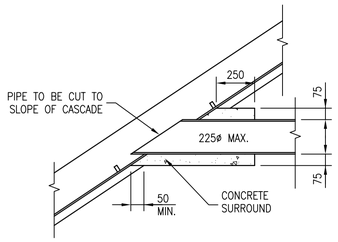

OUTFALL INTO CASCADE DRAIN
SCALE 1:20

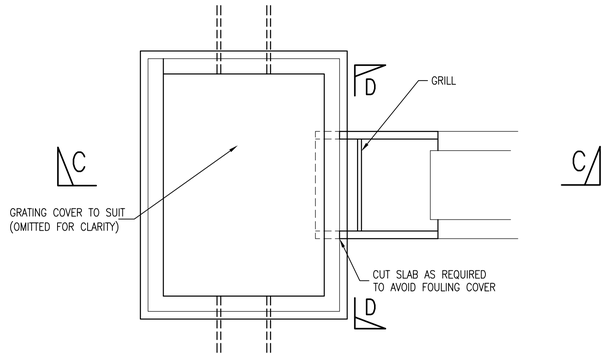

PLAN ON TOE OUTFALL
SCALE 1:20

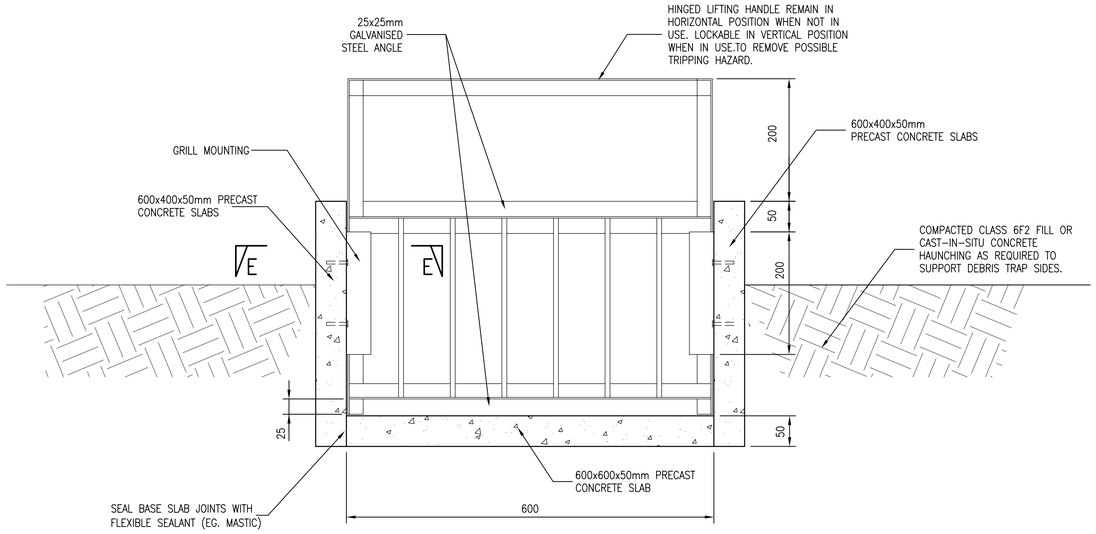

SECTION D–D
SCALE 1:5

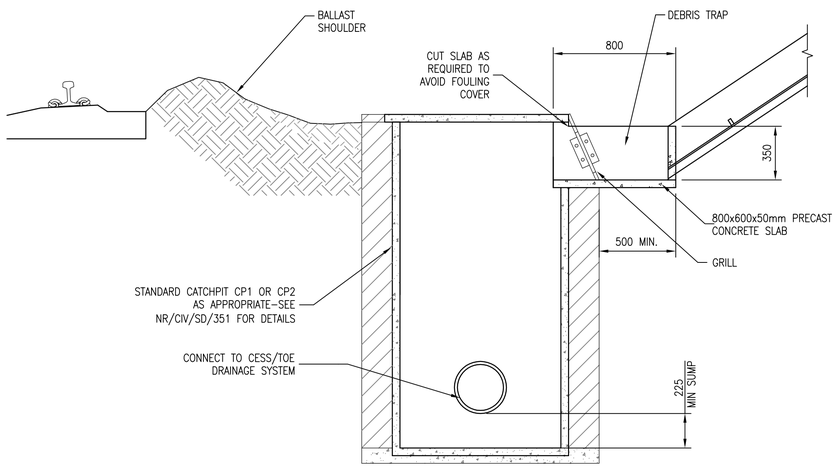

SECTION C–C
SCALE 1:20

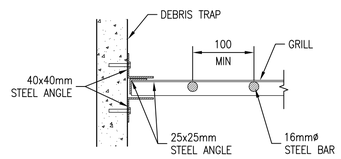

SECTION E–E
(GRILL MOUNTING)
SCALE 1:5

DRAWING No. NR/CIV/SD/325

NOTES

GENERAL NOTES

1. ALL DIMENSIONS ARE IN MILLIMETRES U.N.O.
2. FOR GENERAL NOTES REFER TO DRAWING NR/CIV/SD/320.
3. FOR CASCADE DRAIN GENERAL NOTES REFER TO DRAWING No. NR/CV/SD/324.

Rev	Date	Description of revision	Design'd	C'kd
D	MAY 2011	THIRD ISSUE	GPR	SWMF
C	18.04.08	SECOND ISSUE	GPR	NGAY
B	25.05.07	REVISED FORM B	HCHS	NGAY
A	08.08.06	FIRST ISSUE	TWHS	NGAY

Network Rail

Network Rail Infrastructure Ltd. Registered Office: Kings Place, 90 York Way, London, N1 9AG

Approved	P CLARK	Senior Prog. Eng. Manager Investment Projects Building & Civils	PC	MAY 2011
	Name	Position	Signature	Date

Master copy with original signatures held by Network Rail HQ CIVIL ENGINEERING STANDARD DESIGN

© COPYRIGHT NETWORK RAIL 2010

DRAINAGE SYSTEMS (TRACK AND OFF TRACK)

CASCADE DRAIN STANDARD DETAIL CD2 HALF ROUND PLASTIC PROFILE

Scale	AS SHOWN	
Drawing Number	NR/CIV/SD/325	REV. D

Full document details: NR NR-CIV-SD-325 ISSUE D 2011
Documents Document Sharing Hub
Licensee:Hengan Wilson;cn;20091001; User:sam. ellett
Printed on 11-Jan-2011 08:44:11 GMT
Copyright Network Rail
Provided by IHS under licence with Network Rail
Reproduced by permission of Network Rail. Extracts from BS