Supplementary Information

The following information is associated with Network Rail Standard:
NR CIV/SD/328 Rev C

Additional Content Access

Click the link below to access CAD version of this drawing.

CAD Drawing

- CIV/SD/328

If you have any questions, or need assistance, please contact **IHS Support**

Information accessed via the links above is the property of the Copyright holder

IHS Additional Content Page

Documents
Document Sharing Hub

Copyright Network Rail
Provided by IHS under license with Network Rail
No reproduction or networking permitted without license from IHS
Full document details: NR NR-CIV-SD-328 ISSUE B 2008

Licensee=Weston Williamson/5989497001, User=sam, albett
Not for Resale, 03/27/2016 23:57:38 MDT

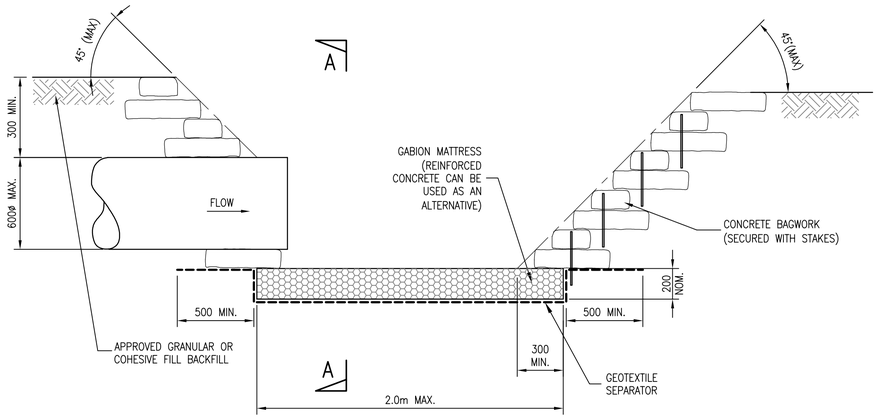

BAGGED OUTLET HEADWALL WITH GABION MATTRESS

DETAIL FOR T–JUNCTION OUTLET

SCALE 1:20

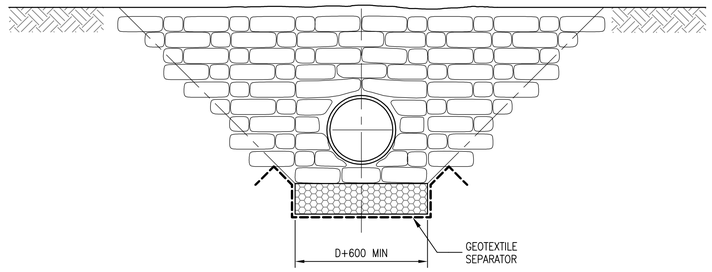

SECTION A–A

SCALE 1:20

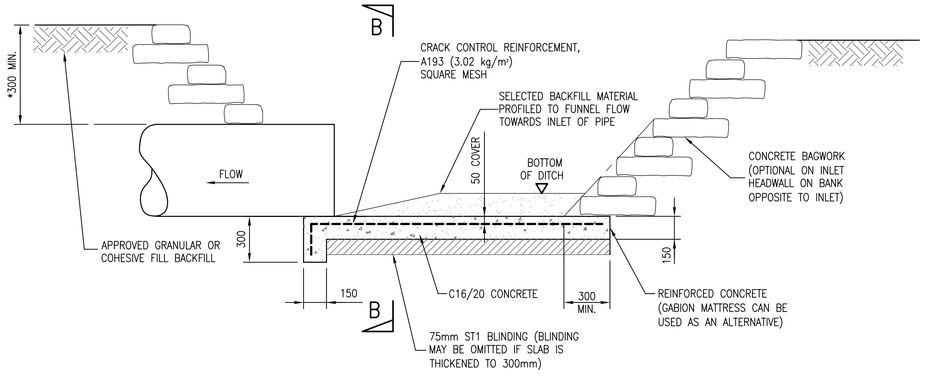

BAGGED INLET HEADWALL WITH R.C. BASE

DETAIL FOR T–JUNCTION OUTLET

SCALE 1:20

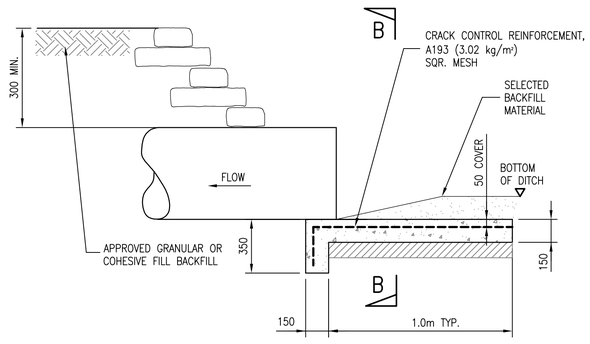

BAGGED INLET HEADWALL WITH R.C. BASE

DETAIL FOR THROUGH FLOW INLET

SCALE 1:20

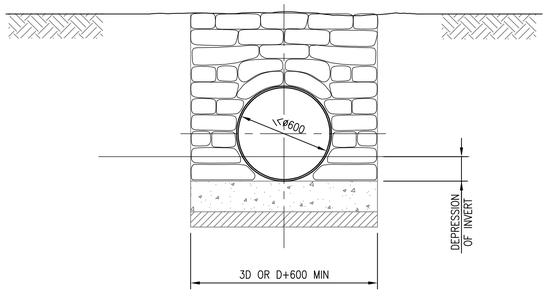

SECTION B–B

SCALE 1:20

BAGGED INLET HEADWALL WITH R.C. BASE

DETAIL FOR T–JUNCTION OUTLET

GABION MATTRESS

17. GABION MATTRESSES TO BE CONSTRUCTED FROM FLEXIBLE DOUBLE TWIST HEXAGONAL WOVEN WIRE MESH OF 80mm OPENING SIZE. MESH THICKNESS 2.4mm GALVANISED TO BS 449. GABION MATTRESSES ARE TO BE ASSEMBLED, FILLED, JOINED AND INSTALLED IN ACCORDANCE WITH THE MANUFACTURERS INSTRUCTION. GABION MATTRESS FILL MATERIAL TO BE HIGHWAYS AGENCY CLASS 6G MATERIAL GRADED 100–150mm.

18. STEELWORK
ALL STEELWORK FOR TRASH SCREENS TO BE GALVANISED S275 STEEL. GALVANISING TO BE IN ACCORDANCE WITH BS EN ISO 1461.

19. BLINDING
ALL BLINDING TO BE IN ACCORDANCE WITH NR/GN/CIV/008 SECTION 85.

20. CULVERT CONSTRUCTION SEQUENCE:
TRENCH EXCAVATED IMMEDIATELY PRIOR TO BACKFILLING. REMOVE ANY UNSUITABLE BEDDING MATERIAL AND REPLACE WITH SPECIFIED BEDDING MATERIAL. EXISTING GROUND CONDITIONS, TRENCH EXCAVATION, STABILITY AND SAFE CONSTRUCTION TO BE ASSESSED BY A GEOTECHNICAL ENGINEER.
FOR CULVERT PIPE DIAMETERS 1200 OR LESS AN INVERT DEPRESSION OF A QUARTER OF THE DIAMETER IS RECOMMENDED (CIRIA REPORT 689 – DESIGN OF CULVERTS).
ENSURE THAT 12 HOURS IS ALLOWED FOR BETWEEN CONSTRUCTION OF BRICK WALLS AND PLACING OF GRANULAR BACKFILL, OR THAT TEMPORARY SUPPORT IS PROVIDED DURING PLACEMENT AND COMPACTION OF BACKFILL.
BACKFILL TO BE AT A SLOPE OF 1 IN 2 FOR GRANULAR FILL AND 1 IN 2.5 FOR COHESIVE FILL.
ALL JOINTS BETWEEN CONCRETE AND/OR BRICKS TO BE MORTARED.

21. INSTALLATION OF THE HEADWALL UNIT TO BE AS SPECIFIED BY MANUFACTURER'S INSTRUCTIONS. FOR HEADWALL BASE KEY DETAIL AS SHOWN IN DRAWING, PLACE SEMI–DRY CONCRETE BLINDING MIX AROUND THE HEADWALL KEY JUST PRIOR TO INSTALLATION, THIS WILL NEGATE THE NEED FOR IMPRACTICAL FORMWORK FOR THE CONSTRUCTION OF THE HEADWALL.

DRAWING No. NR/CIV/SD/328

NOTES

GENERAL NOTES

1. ALL DIMENSIONS ARE IN MILLIMETRES U.N.O.

2. FOR GENERAL NOTES REFER TO DRAWING NR/CIV/SD/320.

3. LIMITED DESIGN LIFE HEADWALL DETAILS SHALL ONLY BE USED WHEN SPECIFIED IN THE PROJECT REMIT.

4. HEADWALL TO BE FULLY DESIGNED (INCLUDING REINFORCEMENT) TO BS EN 1992 TO THE FOLLOWING CASES:
   - LEVEL RETAINED GROUND (COHESIVE OR GRANULAR)
   - 1 IN 2 GRANULAR FILL SLOPE
   - 1 IN 2.5 COHESIVE FILL SLOPE

5. BAGGED HEADWALL CONSTRUCTION METHOD SHALL TAKE FULL ACCOUNT OF THE REQUIREMENTS OF NETWORK RAIL COMPANY PROCEDURE NR/L2/AMG/1030 WORKING SAFELY IN THE VICINITY OF BURIED SERVICES.

6. CULVERT PIPE DIAMETERS COVERED ON THIS STANDARD DETAIL ARE UP TO 600mmø

INSTALLATION GUIDANCE

7. SLOPE OF BAGGED HEADWALL DEPENDANT ON SITE SPECIFIC REQUIREMENTS. DEPTH AND NUMBER OF BAGS SHOULD BE SPECIFIED TO ENSURE STABILITY AGAINST OVERTURNING AND ALSO ADEQUATE.

DESIGN ASSUMPTIONS

8. BATTER ASSUMED TO BE STABLE WITH BAGWORK PROVIDING EROSION PROTECTION ONLY. THE SCHEME DESIGNER SHALL SATISFY THEMSELVES THAT ONSITE CONDITIONS ARE CONSISTENT WITH THE DESIGN ASSUMPTIONS.

9. BAGGED HEADWALL (LIMITED DESIGN LIFE) ASSUMED 10 YEAR DESIGN LIFE FOR PIPE SIZES NOT EXCEEDING 600mmø

10. BAGGED HEADWALL NOT SUITABLE FOR TRASH SCREEN, FLAP VALVE ATTACHMENT OR PIPE DIAMETERS GREATER THAN 600mm.

11. ALL TRASH SCREENS TO BE FULLY DESIGNED BY ENGINEER.

RISK ASSESSMENT

12. SEE DRAWING NR/CIV/SD/320 TABLE 1

SPECIFICATIONS IN ADDITION TO DRG No. NR/CIV/SD/320

IMPERMEABLE MEMBRANES

13. ALL IMPERMEABLE MEMBRANES TO COMPLY WITH NR/GN/CIV/008 SECTION 113.

BAGWORK

14. CONCRETE BAGWORK SHALL CONSIST OF UNPROOFED HESSIAN BAGS LAID IN ALTERNATIVE HEADER AND STRETCHER COURSES AND FILLED 0.75 FULL WITH SEMI–DRY/DRY MIX OF 4:2:1 (SAND:CEMENT:WATER), WITH THE OPEN END TUCKED UNDER THE BAG.

15. BAG SIZE WHEN LAID FLAT TO BE 450X225X100mm. IF STEEL STAKES ARE REQUIRED, THEY SHALL BE 10mm DIA, BY 500mm LONG MILD STEEL, DRIVEN VERTICALLY THROUGH EVERY OTHER COURSE, AND EACH ALTERNATE BAG WITHIN THE COURSE.

SUBGRADE

16. SUBGRADE FOR STRUCTURES TO BE COMPETENT NATURAL GROUND OR ENGINEERED FILL. UNACCEPTABLE MATERIAL TO BE REMOVED AND BACKFILLED WITH EITHER APPROVED COMPACTED GRANULAR MATERIAL OR CAST–INSITU CONCRETE.

Rev	Date	Description of revision	Design'd	C'kd
B	MAY 2011	SECOND ISSUE	GPR	SWMF
A	08.08.06	FIRST ISSUE	TWHS	NGAY

Network Rail

Network Rail Infrastructure Ltd. Registered Office: Kings Place, 90 York Way, London, N1 9AG

	Name	Position	Signature	Date
Approved	P CLARK	Senior Prog. Eng. Manager Investment Projects Building & Civils	PC	MAY 2011

Master copy with original signatures held by Network Rail HQ CIVIL ENGINEERING STANDARD DESIGN

© COPYRIGHT NETWORK RAIL 2010

DRAINAGE SYSTEMS (TRACK AND OFF TRACK)

HEADWALL
STANDARD DETAIL H1
LIMITED DESIGN LIFE / TEMPORARY REPAIR

Scale: AS SHOWN

Drawing Number: NR/CIV/SD/328 REV. B

Full document details: NR NR-CIV-SD-328 ISSUE B 2008
Documents Document Sharing Hub
Copyright Network Rail Provided by IHS under licence with Network Rail Reproduced by permission of Network Rail. No further reproduction or storage from IHS.
Licensee=Halcrow Willbros/5935935/001, User=sam, allen