Supplementary Information

The following information is associated with Network Rail Standard:
NR CIV/SD/329 Rev B

Additional Content Access

Click the link below to access CAD version of this drawing.

CAD Drawing

- CIV/SD/329

If you have any questions, or need assistance, please contact **IHS Support**

Information accessed via the links above is the property of the Copyright holder

IHS Additional Content Page

Documents
Document Sharing Hub

Copyright Network Rail
Provided by IHS under license with Network Rail
No reproduction or networking permitted without license from IHS
Full document details: NR NR-CIV-SD-329 ISSUE B 2011

Licensee=Weston Williamson/5989497001, User=sam, albett
Not for Resale, 03/27/2016 20:52:50 MDT

STANDARD DETAIL H2

LONG LIFE HEADWALL – LARGE DIAMETER CULVERT

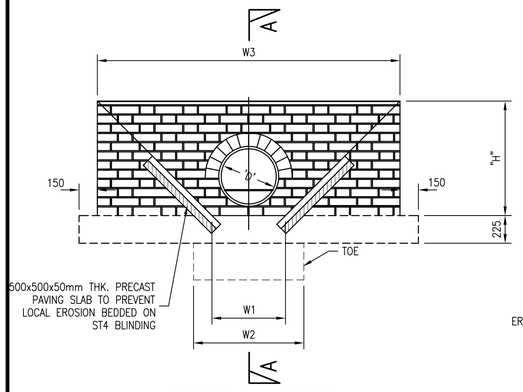

FRONT ELEVATION

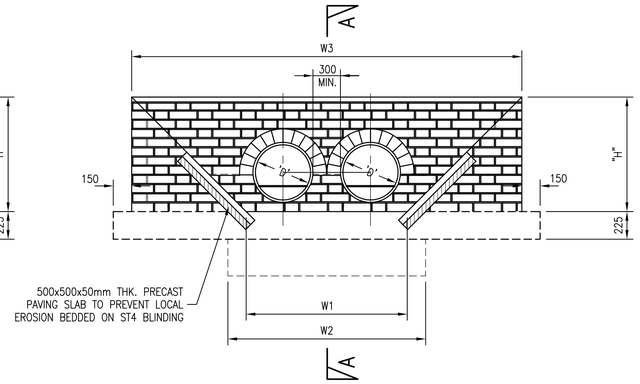

TWIN PIPE CONFIGURATION

BRICK HEADWALL H2

SCALE 1:25

TABLE 1A–SINGLE PIPE

PIPE DIAMETER (mm) 'D'	AREA OF HALF RING ARCH (m^2)	W1 (mm)	W2 (mm)	W3 (mm)
450	0.134	600	900	2(H+300)
600	0.165	600	900	2(H+300)
900	0.181	900	1200	2(H+450)

TABLE 1B–TWIN PIPE

PIPE DIAMETER (mm) 'D'	AREA OF HALF RING ARCH (m^2)	W1 (mm)	W2 (mm)	W3 (mm)
450	2x0.134	1500	1800	W1+(2H)
600	2x0.165	1500	1800	W1+(2H)
900	2x0.181	2250	2550	W1+(2H)

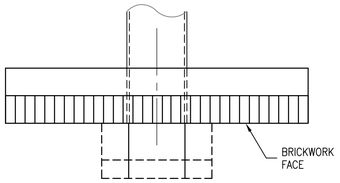

PLAN

(SLABS OMITTED FOR CLARITY)

SCALE 1:25

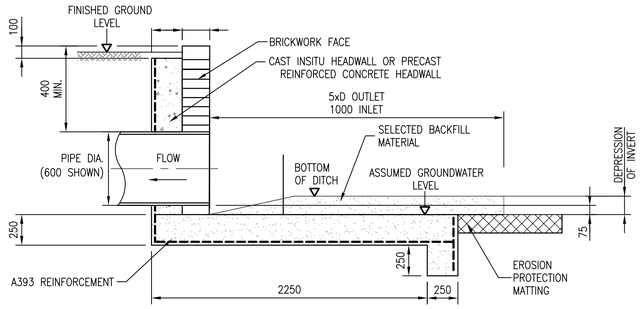

SECTION A–A

(SEE NOTE 6)

SCALE 1:25

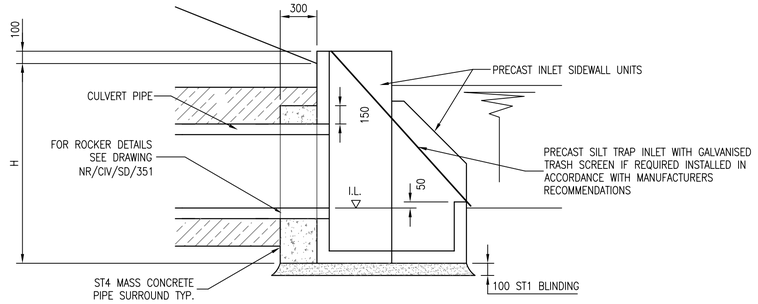

PRE–CAST CONCRETE INLET HEADWALL

SCALE 1:25

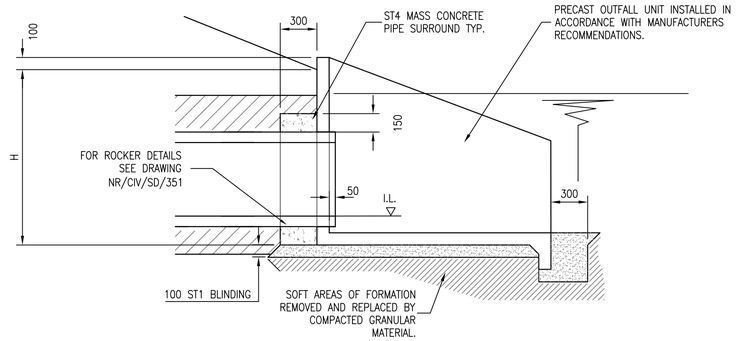

PRE–CAST CONCRETE OUTLET HEADWALL

SCALE 1:25

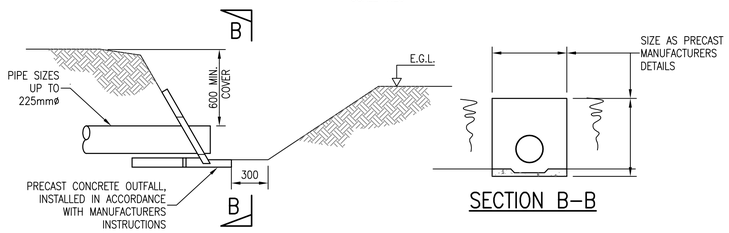

SECTION B–B

PRECAST HEADWALL

SCALE 1:25

DRAWING No. NR/CIV/SD/329

NOTES GENERAL NOTES

1. ALL DIMENSIONS ARE IN MILLIMETRES U.N.O.

2. FOR GENERAL NOTES REFER TO DRAWING NR/CIV/SD/320.

3. HEADWALL TO BE FULLY DESIGNED (INCLUDING REINFORCEMENT) TO BS EN 1992 TO THE FOLLOWING CASES:
   - LEVEL RETAINED GROUND (COHESIVE OR GRANULAR)
   - 1 IN 2 GRANULAR FILL SLOPE
   - 1 IN 2.5 COHESIVE FILL SLOPE

4. SPACING BETWEEN TWIN PIPES TO BE SPECIFIED. CONCRETE HEADWALL UNIT IS SUITABLE FOR CULVERT DIAMETERS OF 450–900mm.

5. ALL CONSENTS AND/OR LICENCES TO BE OBTAINED FROM STATUTORY AUTHORITIES SHALL BE IDENTIFIED BY A DESIGNER IN THE SITE SPECIFIC FROM A/B. (SITES IN SCOTLAND SHALL COMPLY WITH THE REQUIREMENTS OF "WATER ENVIRONMENT (CONTROLLED ACTIVITIES) (SCOTLAND) REGULATIONS 2005)

INSTALLATION GUIDANCE

6. ALL JOINTS BETWEEN CONCRETE AND/OR BRICKS TO BE MORTARED. GRADE 3 MORTAR TO BE USED.

7. FOR CULVERT PIPE DIAMETERS 1200mm OR LESS, AN INVERT DEPRESSION OF A QUARTER OF THE DIAMETER IS RECOMMENDED. BEDDING MATERIAL TO BE PLACED BY NATURAL SILTING OF WATERCOURSE OVER TIME.

DESIGN ASSUMPTIONS

8. FOR CAST INSITU HEADWALLS THE DESIGNER SHALL ENSURE THAT THE HEADWALL DESIGN IS SUITABLE FOR ALL APPLICABLE LOADCASES AND SITE CONDITIONS.

9. REINFORCEMENT SHOWN HAS BEEN DESIGNED BASED ON 1275mm(MAX) RETAINED FILL HEIGHT AND AN APPLIED SURCHARGE LOADING OF 2.5KN/M^2 FOR SLOPED RETAINED GROUND USING COHESIVE OR GRANULAR FILL.

10. IN THE APPLICATION OF PRECAST CONCRETE HEADWALLS DESIGNER SHALL SATISFY HIMSELF THAT:
    - THE PRECAST HEADWALL IS SUITABLE FOR THE SITE CONDITIONS AND LOADINGS.
    - ADEQUATE REINFORCEMENT IS PROVIDED BY THE MANUFACTURER.

RISK ASSESSMENT

11. SEE TABLE 1 DRAWING NR/CIV/SD/320.

SPECIFICATION

12. SEE DRAWING NR/CIV/SD/320.

Rev	Date	Description of revision	Design'd	C'kd
B	MAY 2011	SECOND ISSUE	GPR	SWMF
A	08.08.06	FIRST ISSUE	TWHS	NGAY

Network Rail

Network Rail Infrastructure Ltd. Registered Office: Kings Place, 90 York Way, London, N1 9AG

Approved	P CLARK	Senior Prog. Eng. Manager Investment Projects Building & Civils	PC	MAY 2011
	Name	Position	Signature	Date

Master copy with original signatures held by Network Rail HQ CIVIL ENGINEERING STANDARD DESIGN

© COPYRIGHT NETWORK RAIL 2010

DRAINAGE SYSTEMS (TRACK AND OFF TRACK)

HEADWALL STANDARD DETAIL H2 LONG LIFE / LARGE DIAMETER CULVERT

Scale	AS SHOWN	
Drawing Number	NR/CIV/SD/329	REV. B

Full document details: NR NR-CIV-SD-329 ISSUE B 2011

Documents Document Sharing Hub

Copyright Network Rail
Provided by IHS under licence with Network Rail
Licensee=Mott MacDonald Group Limited/5966001, User=sam, allen
No reproduction or networking permitted without licence from IHS