Supplementary Information

The following information is associated with Network Rail Standard:
NR CIV/SD/330 Rev B

Additional Content Access

Click the link below to access CAD version of this drawing.

CAD Drawing

- CIV/SD/330

If you have any questions, or need assistance, please contact **IHS Support**

Information accessed via the links above is the property of the Copyright holder

IHS Additional Content Page

--`,,,,,,`,,,,,,`,,`,,,,,,,,`-`-`,,`,,`,`,,`---

Documents
Document Sharing Hub

Copyright Network Rail
Provided by IHS under license with Network Rail
No reproduction or networking permitted without license from IHS
Full document details: NR NR-CIV-SD-330 ISSUE B 2011

Licensee=Weston Williamson/5989497001, User=sam, albett
Not for Resale, 03/27/2016 20:51:10 MDT

Full document details: NR NR-CIV-SD-339 ISSUE B 2011

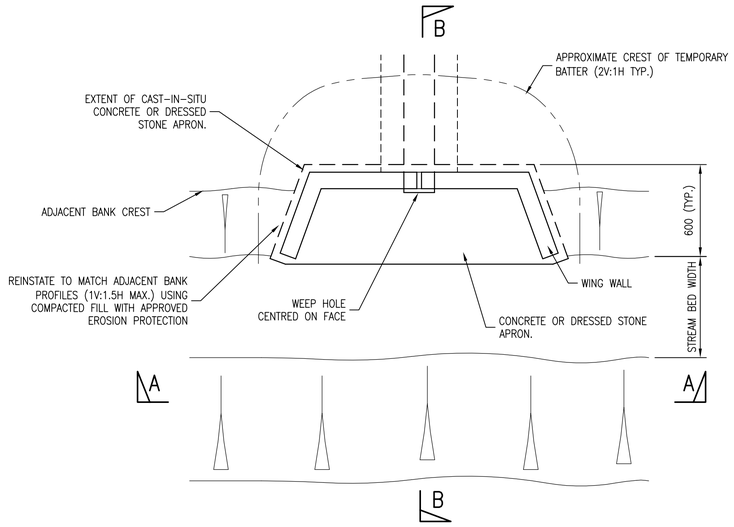

BRICK HEADWALL PLAN

SCALE 1:20

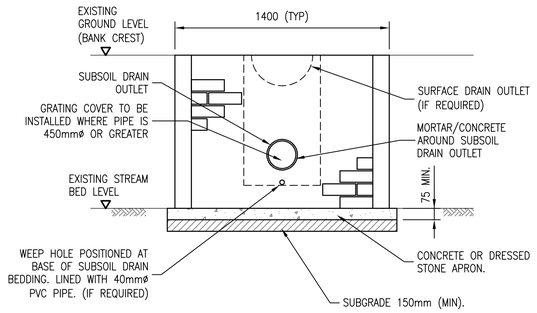

ELEVATION A–A

SCALE 1:20

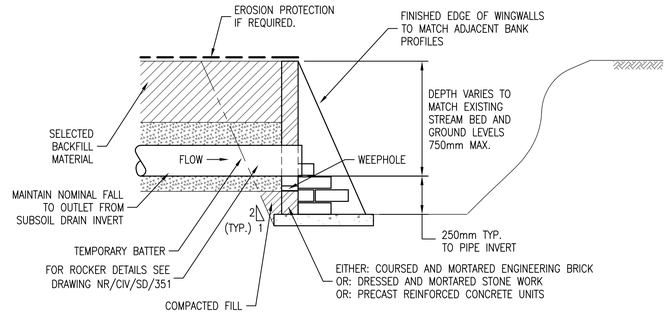

SECTION B–B

SCALE 1:20

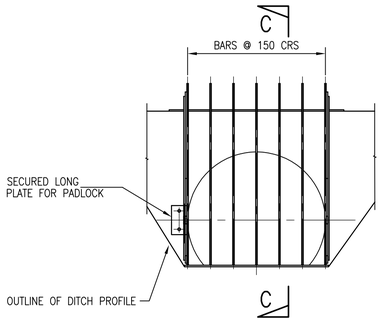

ELEVATION

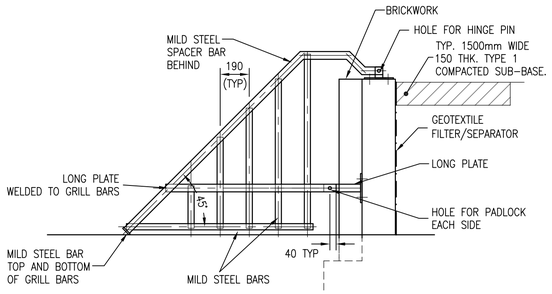

SECTION C–C

TYPICAL CONFIGURATION FOR UPSTREAM TRASH SCREEN (IF REQUIRED)

SCALE 1:20

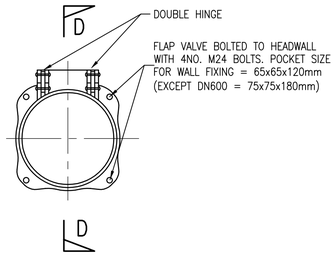

ELEVATION

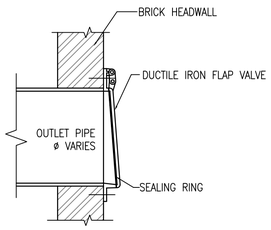

SECTION D–D

TYPICAL FLAP VALVE DETAIL

SCALE 1:20

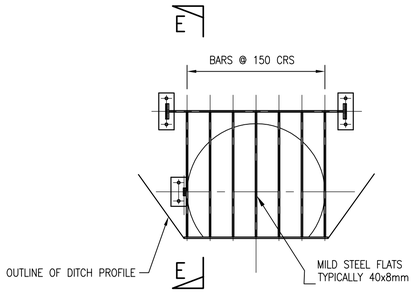

ELEVATION

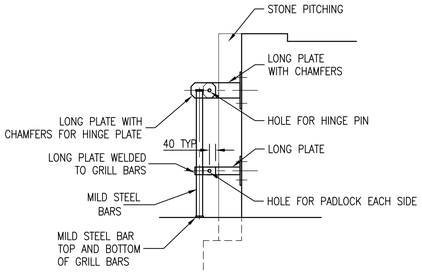

SECTION E–E

TYPICAL CONFIGURATION FOR DOWNSTREAM SECURITY SCREEN

(TO BE USED ONLY WITH UPSTREAM TRASH SCREEN)

SCALE 1:20

DRAWING No. NR/CIV/SD/330

NOTES GENERAL NOTES

1. ALL DIMENSIONS ARE IN MILLIMETRES U.N.O.
2. FOR GENERAL NOTES REFER TO DRAWING NR/CIV/SD/320.
3. FOR GENERAL HEADWALL NOTES REFER TO DRAWING NR/CIV/SD/328.
4. HEADWALL TO BE FULLY DESIGNED (INCLUDING REINFORCEMENT) TO BS EN 1992 AND BS EN 1997 TO THE FOLLOWING CASES:
   - LEVEL RETAINED GROUND (COHESIVE OR GRANULAR)
   - 1 IN 2 GRANULAR FILL SLOPE
   - 1 IN 2.5 COHESIVE FILL SLOPE
5. SPACING BETWEEN TWIN PIPES TO BE SPECIFIED. CONCRETE HEADWALL UNIT IS SUITABLE FOR CULVERT DIAMETERS OF 450–900mm.
6. ALL CONSENTS AND/OR LICENCES TO BE OBTAINED FROM STATUTORY AUTHORITIES SHALL BE IDENTIFIED BY A DESIGNER IN THE SITE SPECIFIC FROM A/B. (SITES IN SCOTLAND SHALL COMPLY WITH THE REQUIREMENTS OF "WATER ENVIRONMENT (CONTROLLED ACTIVITIES) (SCOTLAND) REGULATIONS 2005)

INSTALLATION GUIDANCE

7. ALL JOINTS BETWEEN CONCRETE AND/OR BRICKS TO BE MORTARED. GRADE M5 MORTAR TO BE USED.
8. FOR CULVERT PIPE DIAMETERS 1200mm OR LESS, AN INVERT DEPRESSION OF A QUARTER OF THE DIAMETER IS RECOMMENDED. BEDDING MATERIAL TO BE PLACED BY NATURAL SILTING OF WATERCOURSE OVER TIME.

DESIGN ASSUMPTIONS

9. SEE DRAWING NR/CIV/SD/329.

RISK ASSESSMENT

10. SEE TABLE 1 DRAWING NR/CIV/SD/320.

SPECIFICATION

11. SEE DRAWING NR/CIV/SD/320.

FLAP VALVE

12. BODY AND FLAP IN DUCTILE IRON TO BE IN ACCORDANCE WITH BS EN 1563 CR 500/7. HINGE PIN IN STAINLESS STEEL TO BE IN ACCORDANCE WITH BS EN 10068 1.4310.

Rev	Date	Description of revision	Design'd	C'kd
B	MAY 2011	SECOND ISSUE	GPR	SWMF
A	08.08.06	FIRST ISSUE	TWHS	NGAY

Network Rail

Network Rail Infrastructure Ltd. Registered Office: Kings Place, 90 York Way, London, N1 9AG

	Name	Position	Signature	Date
Approved	P CLARK	Senior Prog. Eng. Manager Investment Projects Building & Civils	PC	MAY 2011

Master copy with original signatures held by Network Rail HQ CIVIL ENGINEERING STANDARD DESIGN

© COPYRIGHT NETWORK RAIL 2010

DRAINAGE SYSTEMS (TRACK AND OFF TRACK)

HEADWALL STANDARD DETAILS

Scale	AS SHOWN	
Drawing Number	NR/CIV/SD/330	REV. B

Copyright Network Rail
Provided by IHS under licence with Network Rail
No reproduction or distribution permitted without prior written consent from IHS
Licensee:nbrgan Williamson/5555861001, User:sam. elliott
Mon Jun 13 08:00:00 GMT+00:00 2011

AVA Documents
Document Sharing Hub