The following information is associated with Network Rail Standard:
NR CIV/SD/390 Rev B

Additional Content Access

Click the link below to access CAD version of this drawing.

CAD Drawing

- CIV/SD/390

If you have any questions, or need assistance, please contact **IHS Support**

Information accessed via the links above is the property of the Copyright holder

IHS Additional Content Page

--`,,,`,,`,,`,`,,`,,,,,,```-`-`,,`,,`,`,,`---

Documents
Document Sharing Hub

Copyright Network Rail
Provided by IHS under license with Network Rail
No reproduction or networking permitted without license from IHS

Licensee=Weston Williamson/5989497001, User=sam, albett
Not for Resale, 03/27/2016 23:57:02 MDT

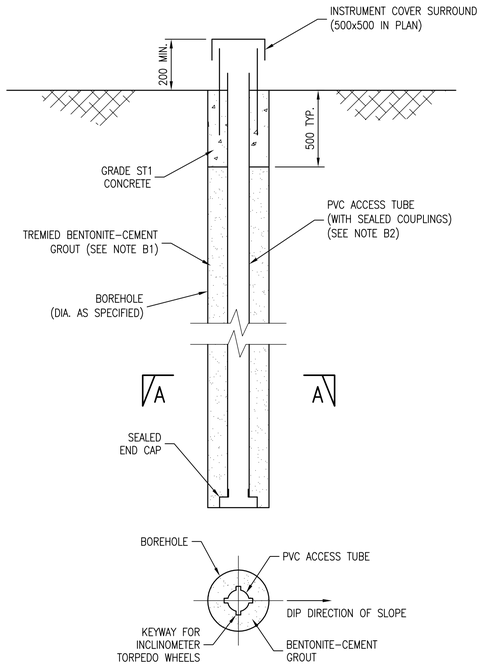

SECTION A–A

STANDARD DETAIL FOR INCLINOMETER

SCALE 1:20

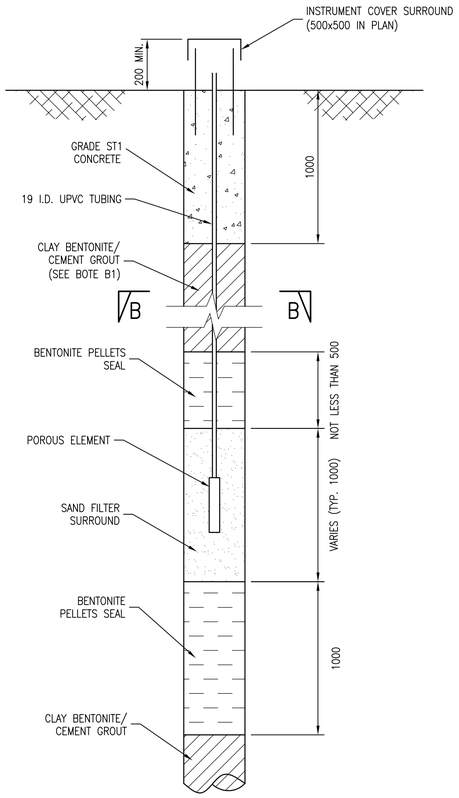

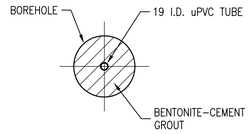

SECTION B–B

STANDARD DETAIL FOR PIEZOMETER

SCALE 1:20

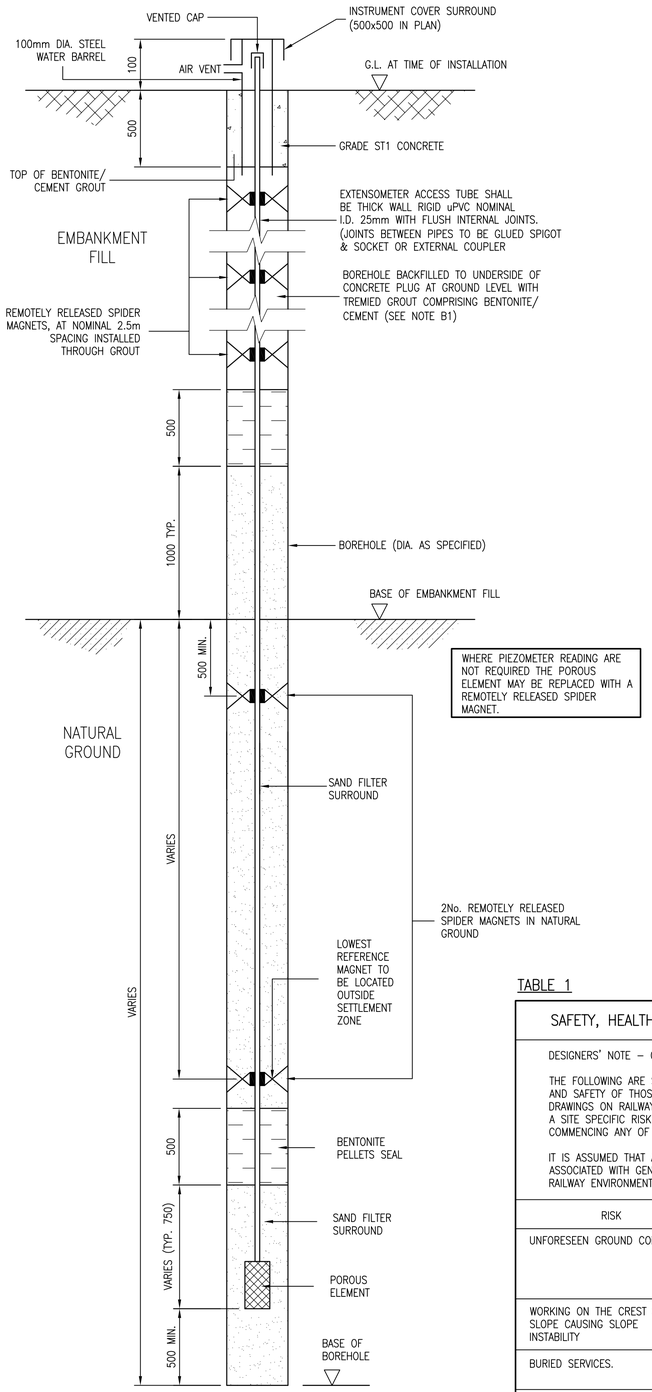

STANDARD DETAIL FOR COMBINED EXTENSOMETER/PIEZOMETER

SCALE 1:20

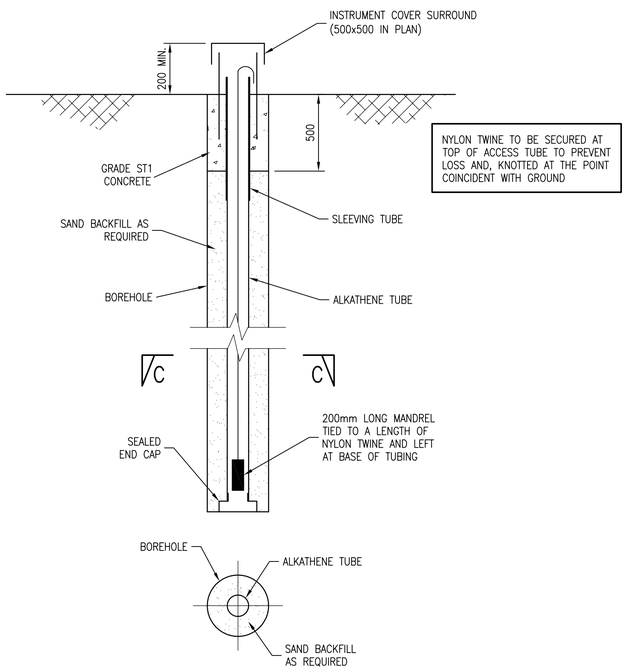

SECTION C–C

STANDARD DETAIL FOR SLIP INDICATOR

SCALE 1:20

D RISK ASSESMENT

D REFER TO TABLE 1

E INSTALLATION GUIDANCE

INCLINOMETER

E1 BOREHOLE TO BE PRE–GROUTED BY TREMIE PIPE BEFORE INCLINOMETER TUBE IS INSTALLED.

E2 FILL TUBE WITH WATER TO COUNTERACT BUOYANCY, MAINTAINING WATER LEVEL IF NECESSARY.

E3 COUPLINGS TO BE AS PER MANUFACTURERS RECOMMENDATIONS.

E4 GROUT TO BE MIXED ON–SITE IN A COLLOIDAL MIXER, UNLESS OTHERWISE AGREED WITH THE EMPLOYER'S REPRESENTATIVE.

E5 MIX CEMENT WITH WATER FIRST, ADDING BENTONITE LAST TO ACHIEVE THE REQUIRED VISCOSITY.

TABLE 1

SAFETY, HEALTH & ENVIRONMENT RISK ASSESSMENT

DESIGNERS' NOTE – CDM REG. 13(2)(b)

THE FOLLOWING ARE SIGNIFICANT HAZARDS WHICH MIGHT AFFECT THE HEALTH AND SAFETY OF THOSE UNDERTAKING THE WORKS OUTLINED IN THIS SET OF DRAWINGS ON RAILWAY STRUCTURES OR THOSE AFFECTED BY THESE ACTIVITIES. A SITE SPECIFIC RISK ASSESSMENT SHOULD ALWAYS BE UNDERTAKEN PRIOR TO COMMENCING ANY OF THE WORKS DESCRIBED ON SITE.

IT IS ASSUMED THAT A COMPETENT CONTRACTOR IS AWARE OF THE RISKS ASSOCIATED WITH GENERAL CONSTRUCTION ACTIVITIES UNDERTAKEN WITHIN THE RAILWAY ENVIRONMENT.

RISK	STAGE	MITIGATING MEASURES
UNFORESEEN GROUND CONDITIONS	C	WORKS TO BE COMPLETED UNDER THE SUPERVISION OF THE EMPLOYER'S REPRESENTATIVE (AS SPECIFIED IN SITE SPECIFIC "SPECIFICATION FOR GROUND INVESTIGATION WORKS")
WORKING ON THE CREST OF THE SLOPE CAUSING SLOPE INSTABILITY	D/C	ENSURE NO HEAVY DUTY VEHICLES OR CRANES TO WORK ON THE CREST OF THE SLOPE.
BURIED SERVICES.	D/C	ENSURE AREAS OF EXCAVATION ARE WELL AWAY FROM LOCATIONS OF SERVICES (REFER TO NOTE A7)
WORKING NEAR THE NETWORK RAIL S & T /M & E CABLES.	D/C	ENSURE ALL CABLES/SERVICES ARE IDENTIFIED BY CONTRACTOR PRIOR TO COMMENCEMENT OF WORK.
WORKING NEAR THE RUNNING LINE.	D/C	ALL WORKS TO BE UNDERTAKEN IN ACCORDANCE WITH NETWORK RAIL STANDARDS/RULE BOOK USING RIMINI PLANNING.
ENVIRONMENTAL CONSTRAINTS I.E. S.S.S.I'S, PROTECTED SPECIES, FLOOD RISK ETC.	D/C	WHERE SPECIFIC EVIRONMENTAL RISKS ARE IDENTIFIED CONSULTATION WITH THE RELEVANT STATUTORY AUTHORITY IS TO BE SOUGHT TO OBTAIN WRITTEN CONSENT FOR THE WORKS PRIOR TO CONSTRUCTION.
WORKING WITH CONTAMINATED LAND.	C	ALL WORKS TO BE UNDERTAKEN IN ACCORDANCE WITH BS10175: 2001 INVESTIGATION OF POTENTIALLY CONTAMINATED LAND – CODE OF PRACTICE

NOTE : C=CONSTRUCTION, D=DESIGN, O=OPERATION

DRAWING No. NR/CIV/SD/390

NOTES

A GENERAL

A1 ALL DIMENSIONS ARE IN MILLIMETRES UNLESS OTHERWISE STATED.

A2 DIAMETER OF HOLE TO BE AS REQUIRED TO ALLOW INSTALLATION OF TUBING.

A3 COVER MAY BE FLUSH WITH GROUND SURFACE WHERE SPECIFIED BY THE ENGINEER.

A4 UNLESS NOTED OTHERWISE, ALL GROUND INVESTIGATION WORKS SHALL BE COMPLETED IN ACCORDANCE WITH SECTION 30 OF NETWORK RAIL SPECIFICATION NR/GN/CIV/008

A5 UNLESS NOTED OTHERWISE ALL EXCAVATIONS SHALL BE COMPLETED IN ACCORDANCE WITH SECTION 50 OF NETWORK RAIL SPECIFICATION NR/GN/CIV/008.

A6 THIS DRAWING IS TO BE READ IN CONJUNCTION WITH THE SITE SPECIFIC SPECIFICATION FOR GROUND INVESTIGATION WORKS.

A7 ALL WORKS ARE TO BE COMPLETED IN ACCORDANCE WITH NETWORK RAIL PROCEDURES AND COMPANY STANDARDS:–

1. NR/SP/BUS/011 PREVENTION OF DAMAGE TO AND DANGER FROM SURFACE AND BURIED SERVICES.
2. NR/SP/BUS/028 PROVISION OF INFORMATION ON SURFACE & BURIED SERVICES TO CONTRACTORS.
3. NR/PRC/MPI/CP0024 CONTROL AND USE OF METAL PINS AND SPIKES ON NETWORK RAIL INFRASTRUCTURE.
4. NR/PRC/MPI/CP0026 PROCESS FOR LOCATING BURIED SERVICES PRIOR TO GROUND INVESTIGATION.

A8 ALL WORKS ARE TO BE COMPLETED IN ACCORDANCE WITH THE REQUIREMENTS OF BRITISH STANDARD:–

1. BS8500: 2002 CONCRETE
2. BS5930: 1999 CODE OF PRACTICE FOR SITE INVESTIGATIONS.

B SPECIFICATION

B1 GROUT SPECIFICATION SHALL BE DESIGNED TO SUIT SITE CONDITIONS AND INCLUDED BY THE DESIGNER IN A PROJECT SPECIFIC SPECIFICATION.

B2 ALTERNATIVE MATERIALS MAY BE PROPOSED BY THE DESIGNER IN A PROJECT SPECIFIC FORM A/B.

B3 MAGNET POSITIONS IN BOREHOLES ARE TO BE DEFINED BY THE DESIGNER IN A PROJECT SPECIFIC FORM A/B.

C DESIGN ASUMPTIONS

C1 EXTENSOMETER DETAILS ASSUME INSTRUMENT INSTALLATION IN EXISTING EMBANKMENT CONSTRUCTION. FOR NEW EMBANKMENTS SPIDER MAGNETS MAY BE REPLACED WITH PLATE MAGNETS INSTALLED DURING CONSTRUCTION.

Rev	Date	Description of revision	Design'd	C'kd
B	19.03.08	SECOND ISSUE	GPR	NGAY
A	08.08.06	FIRST ISSUE	GPR	NGAY
P3	04.08.06	REVISED FORM B	GPR	NGAY
P2	23.05.06	FORM B	GPR	NGAY
P1	21.03.06	FORM A	GPR	NGAY

Network Rail
40 Melton Street
London NW1 2EE
Tel: 020–7557–8000

	Name	Position	Signature	Date
Approved	P. CLARK	Senior Prog. Eng. Manager Infrastructure Inv. Construction	PC	08.08.06
Authorised	K. TEAGER	Director of Civil Engineering	KT	08.08.06

Master copy with original signatures held by Network Rail HQ
CIVIL ENGINEERING STANDARD DESIGN

© COPYRIGHT NETWORK RAIL 2008

EARTHWORKS AND ASSOCIATED DRAINAGE

EARTHWORKS INSTRUMENTATION

Scale	AS SHOWN
Drawing Number	NR/CIV/SD/390 B

Full document details: NR NR-CIV-SD-390 ISSUE B 2008
Documents Document Share Hub
Copyright Network Rail
Provided by IHS under licence with Network Rail
No reproduction or networking permitted without licence from IHS
Licensee=Mercer Willbros/5935612001, User=sam, allnet
2008-08-08 09:22:42 MDT