Supplementary Information

The following information is associated with Network Rail Standard:
NR CIV/SD/404 Rev E

Additional Content Access

Click the link below to access CAD version of this drawing.

CAD Drawing

- CIV/SD/404

If you have any questions, or need assistance, please contact **IHS Support**

Information accessed via the links above is the property of the Copyright holder

IHS Additional Content Page

Documents
Document Sharing Hub

Copyright Network Rail
Provided by IHS under license with Network Rail
No reproduction or networking permitted without license from IHS
Full document details: NR NR-CIV-SD-404 ISSUE E 2015

Licensee=Weston Williamson/5989497001, User=sam, albett
Not for Resale, 03/27/2016 18:58:58 MDT

ERECTION SEQUENCE:

STAGE 1. PREPARE SITE FOR CONSTRUCTION:
CLEAR VEGETATION, REMOVE OBSTACLES ETC., AND LOCATE AND MARK SERVICES. SERVICES TO BE PROTECTED DURING CONSTRUCTION PERIOD

INSTALL FOUNDATIONS (OUTSIDE THE SCOPE OF THE STANDARD DRAWINGS). FOUNDATIONS TO INCORPORATE HOLDING DOWN BOLTS DETAILS AS SHOWN BELOW

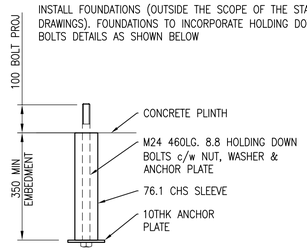

DETAIL OF HOLDING DOWN BOLTS
SCALE 1:10

STAGE 2. INSTALL STAIRCASE SUPPORTS:
CARE TO BE TAKEN WHEN INSTALLING H.D.BOLTS. ORIENTATION TO BE CHECKED PRIOR TO CASTING CONCRETE. CONSIDER TEMPORARY SUPPORT REQUIREMENTS

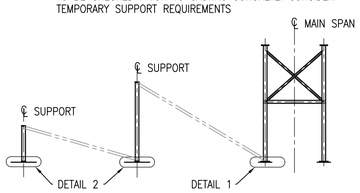

STAIRCASE SUPPORTS
SCALE 1:125

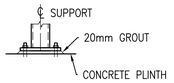

DETAIL 1
SCALE 1:25

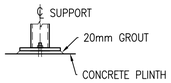

DETAIL 2
SCALE 1:25

STAGE 3. INSTALL STAIRCASE
INSTALL TOP LANDING FIRST, FOLLOWED BY INTERMEDIATE STAIRS, THEN BASE UNIT

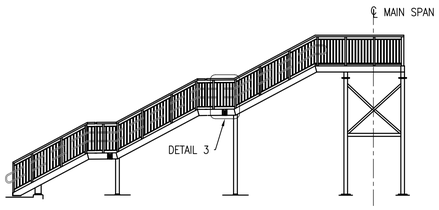

STAIRCASE
SCALE 1:125

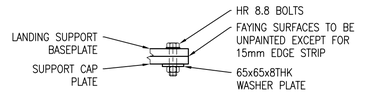

SUPPORT/LANDING H.S.F.G. BOLT DETAIL
SCALE 1:10

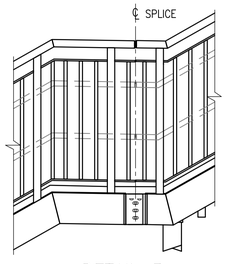

DETAIL 3
(SPLICE ON RAMP SIMILAR)
SCALE 1:25

STAGE 4. INSTALL MAIN SPAN

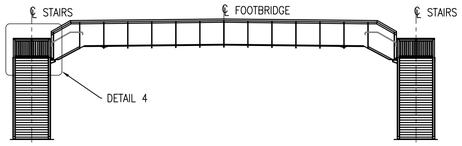

ELEVATION, STEPPED DECK
SCALE 1:200

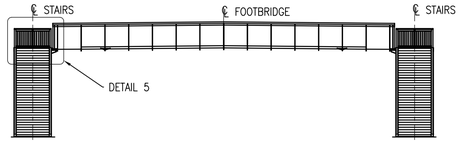

ELEVATION, FLAT DECK
SCALE 1:200

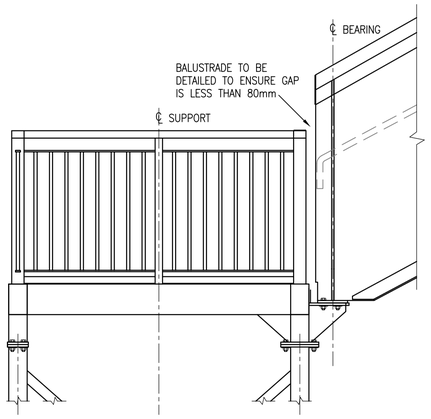

DETAIL 4
SCALE 1:25

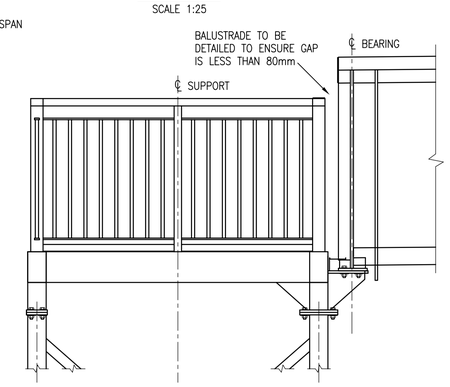

DETAIL 5
SCALE 1:25

STAGE 5. WHERE APPLICABLE INSTALL RAMP SUPPORTS (REFER DETAILS 1 & 2). APPROACH TO RAMP IS OUTSIDE THE SCOPE OF THE STANDARD DETAILS

STAGE 6. INSTALL RAMP SECTIONS STARTING FROM DECK LEVEL DOWN TO RAMP END. THE LINK SECTION BETWEEN RAMPS SHOULD BE INSTALLED LAST.

STAGE 7. GROUT UNDER SUPPORT BASEPLATES

STAGE 8. WHEN ERECTION OF STAIRS, RAMPS AND MAIN SPAN IS COMPLETE, INFILL PLATES TO BE INSTALLED AT LIFTING POINTS, ALL JOINTS TO BE SEALED WITH EPOXY SEALANT AND FINALLY ALL WATERPROOFING/SURFACING TO BE MADE GOOD/REPAIRED AT JOINT AND LIFTING POINT POSITIONS

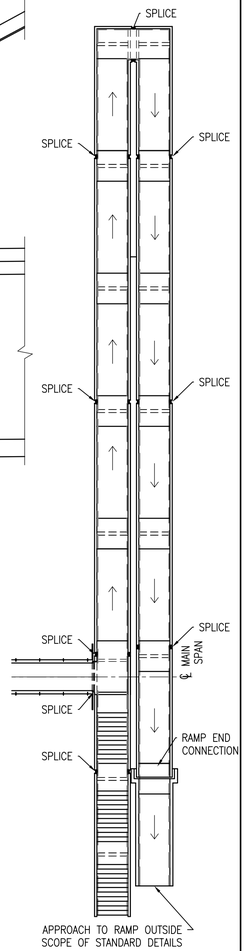

CONNECTIONS ON PLAN
SCALE 1:200

ERECTION SEQUENCE (TRESTLE SUPPORTS)

DO NOT SCALE THIS DRAWING

ERECTION SEQUENCE:

STAGE 1. PREPARE SITE FOR CONSTRUCTION:
CLEAR VEGETATION, REMOVE OBSTACLES ETC., AND LOCATE AND MARK SERVICES. SERVICES TO BE PROTECTED DURING CONSTRUCTION PERIOD

INSTALL FOUNDATIONS (OUTSIDE THE SCOPE OF THE STANDARD DRAWINGS). FOUNDATIONS TO INCORPORATE HOLDING DOWN BOLTS DETAILS AS SHOWN BELOW

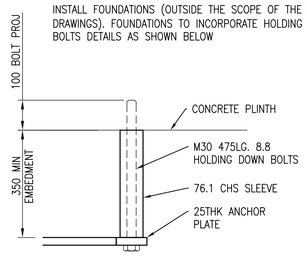

DETAIL OF HOLDING DOWN BOLTS
SCALE 1:10

STAGE 2. INSTALL STAIRCASE SUPPORTS:
CARE TO BE TAKEN WHEN INSTALLING H.D.BOLTS. ORIENTATION TO BE CHECKED PRIOR TO CASTING CONCRETE. CONSIDER TEMPORARY SUPPORT REQUIREMENTS

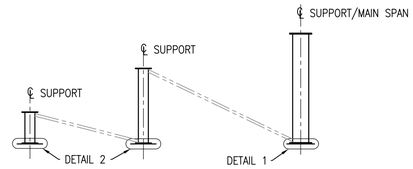

STAIRCASE SUPPORTS
SCALE 1:125

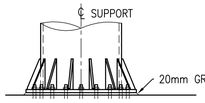

DETAIL 1
SCALE 1:25

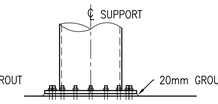

DETAIL 2
SCALE 1:25

STAGE 3. INSTALL STAIRCASE
INSTALL TOP LANDING FIRST, FOLLOWED BY INTERMEDIATE STAIRS, THEN BASE UNIT

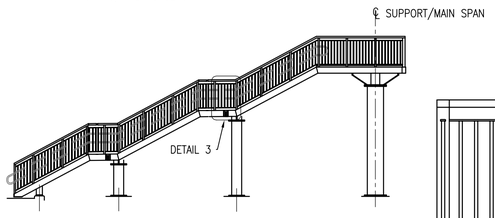

STAIRCASE
SCALE 1:125

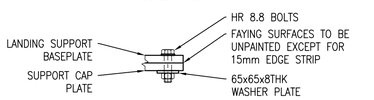

SUPPORT/LANDING H.S.F.G. BOLT DETAIL
SCALE 1:10

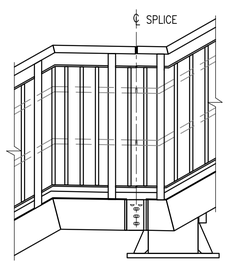

DETAIL 3
SCALE 1:25

STAGE 4. INSTALL MAIN SPAN

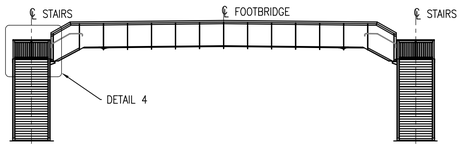

ELEVATION, STEPPED DECK
SCALE 1:200

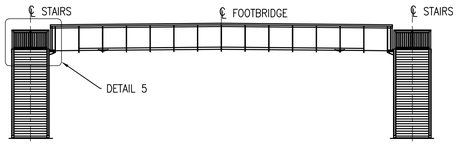

ELEVATION, FLAT DECK
SCALE 1:200

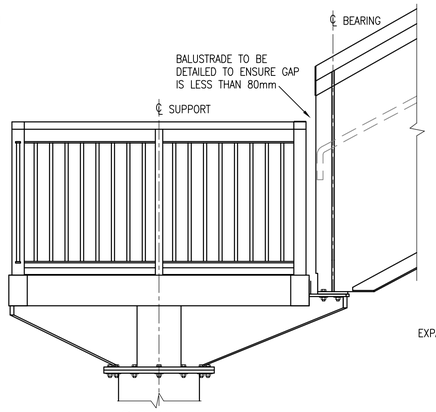

DETAIL 4
SCALE 1:25

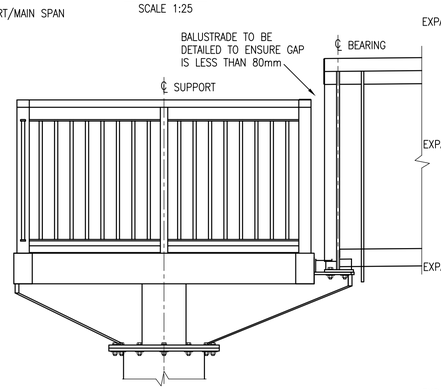

DETAIL 5
SCALE 1:25

STAGE 5. WHERE APPLICABLE INSTALL RAMP SUPPORTS (REFER DETAILS 1 & 2). APPROACH TO RAMP IS OUTSIDE THE SCOPE OF THE STANDARD DETAILS

STAGE 6. INSTALL RAMP SECTIONS STARTING FROM DECK LEVEL DOWN TO RAMP END. THE LINK SECTION BETWEEN RAMPS SHOULD BE INSTALLED LAST.

STAGE 7. GROUT UNDER SUPPORT BASEPLATES

STAGE 8. WHEN ERECTION OF STAIRS, RAMPS AND MAIN SPAN IS COMPLETE, INFILL PLATES TO BE INSTALLED AT LIFTING POINTS, ALL JOINTS TO BE SEALED WITH EPOXY SEALANT AND FINALLY ALL WATERPROOFING/SURFACING TO BE MADE GOOD/REPAIRED AT JOINT AND LIFTING POINT POSITIONS

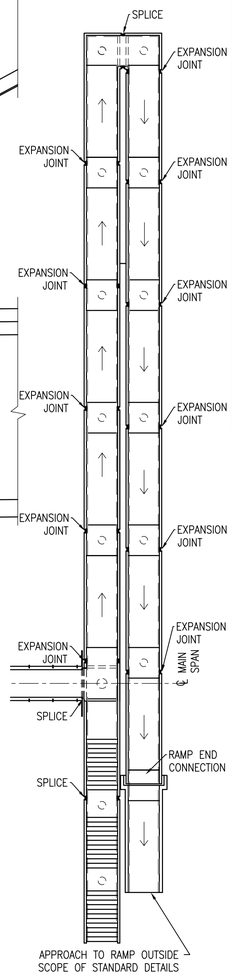

CONNECTIONS ON PLAN
SCALE 1:200

ERECTION SEQUENCE (CHS SUPPORTS)

DRAWING No. NR/CIV/SD/404

NOTES

1. ALL DIMENSIONS IN MILLIMETRES UNLESS NOTED OTHERWISE.
2. THIS DRAWING TO BE READ IN CONJUNCTION WITH ALL NR/CIV/SD/400 SERIES DRAWINGS.
3. FOR GENERAL NOTES REFER TO DRAWING NR/CIV/SD/400.
4. REFER TO TUM SECTION 6.1 WHEN CONSIDERING STEPPED DECK SOLUTION AS THIS IN NOT PREFERRED

Rev	Date	Description of revision	Design'd	C'kd
E	10.07.15	FINAL ISSUE	BC	SWMF
D	18.06.15	FINAL ISSUE	BC	SWMF
C	25.07.14	THIRD ISSUE	BC	SWMF
B	02.07.14	SECOND ISSUE	CJF	SWMF
P4	24.10.13	FORM B APPROVAL	KKK	SWMF
P3	10.09.13	DRAFT	KKK	SWMF
P2	06.05.11	For Information	SzT	SWF
P1	09.02.11	FORM A APPROVAL	GPR	SWF
A	18.04.08	FIRST ISSUE	GPR	NGAY

Network Rail

Network Rail Infrastructure Ltd. Registered Office: Kings Place, 90 York Way, London, N1 9AG

Approved				
	A. LUNDBERG	Investment Projects Building & Civils		
	Name	Position	Signature	Date

Master copy with original signatures held by Network Rail HQ CIVIL ENGINEERING STANDARD DESIGN

© COPYRIGHT NETWORK RAIL 2011

NON-STATION FOOTBRIDGES STANDARD DRGS AND DETAILS

FOOTBRIDGE SUPERSTRUCTURE ERECTION SEQUENCES

Scale	AS SHOWN	
Drawing Number	NR/CIV/SD/404	REV. E

Full document details: NR NR-CIV-SD-404 ISSUE E 2015
Documents Document Sharing Hub
Copyright Network Rail
Provided by IHS under licence with Network Rail
Licensee=Mapon Willowpond/9999100, User=sam, allnet
No reproduction or networking permitted without licence from IHS