Supplementary Information

The following information is associated with Network Rail Standard:
NR CIV/SD/411 Rev E

Additional Content Access

Click the link below to access CAD version of this drawing.

CAD Drawing

- CIV/SD/411

If you have any questions, or need assistance, please contact **IHS Support**

Information accessed via the links above is the property of the Copyright holder

IHS Additional Content Page

--`,,,,,,`,,,,,,`,,`,,,,,,,,`-`-`,,`,,`,`,,`---

Documents
Document Sharing Hub

Copyright Network Rail
Provided by IHS under license with Network Rail
No reproduction or networking permitted without license from IHS
Full document details: NR NR-CIV-SD-411 ISSUE E 2015

Licensee=Weston Williamson/5989497001, User=sam, albett
Not for Resale, 03/27/2016 18:58:44 MDT

DO NOT SCALE THIS DRAWING

DRAWING No. NR/CIV/SD/411

NOTES

1. ALL DIMENSIONS IN MILLIMETRES UNLESS NOTED OTHERWISE.
2. THIS DRAWING TO BE READ IN CONJUNCTION WITH ALL NR/CIV/SD/400 SERIES DRAWINGS.
3. FOR GENERAL NOTES REFER TO DRAWING NR/CIV/SD/400.

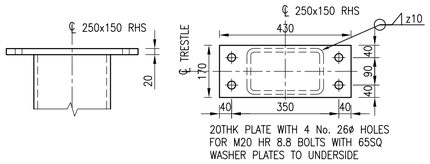

DETAIL 8
SCALE 1:10

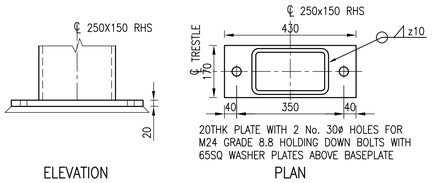

DETAIL 9
SCALE 1:10

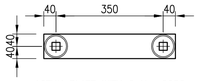

ANCHOR PLATE
SCALE 1:10

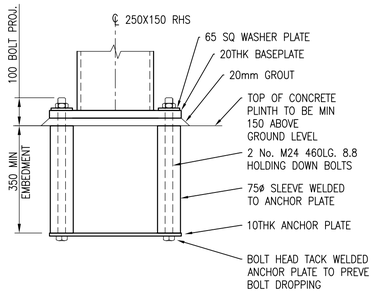

DETAIL OF HOLDING DOWN BOLTS
SCALE 1:10

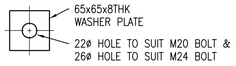

1 No. WASHER PLATE REQUIRED FOR EACH H.D BOLT PLACED ABOVE BASEPLATE & 1 No. WASHER PLATE REQUIRED FOR EACH CAP PLATE BOLT PLACED BELOW CAP PLATE

DETAIL OF WASHER PLATE
SCALE 1:5

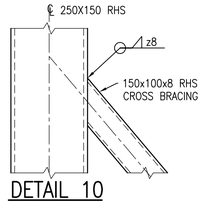

DETAIL 10
SCALE 1:10

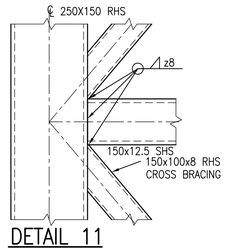

DETAIL 11
SCALE 1:10

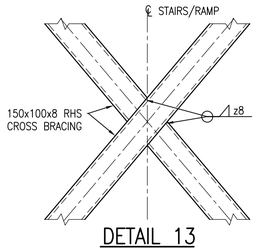

DETAIL 13
SCALE 1:10

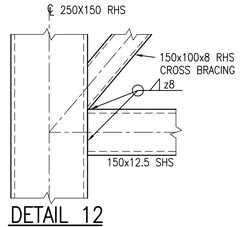

DETAIL 12
SCALE 1:10

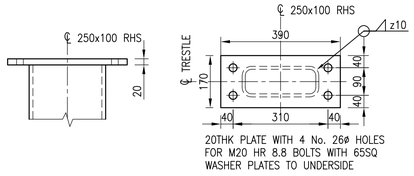

DETAIL 14
SCALE 1:10

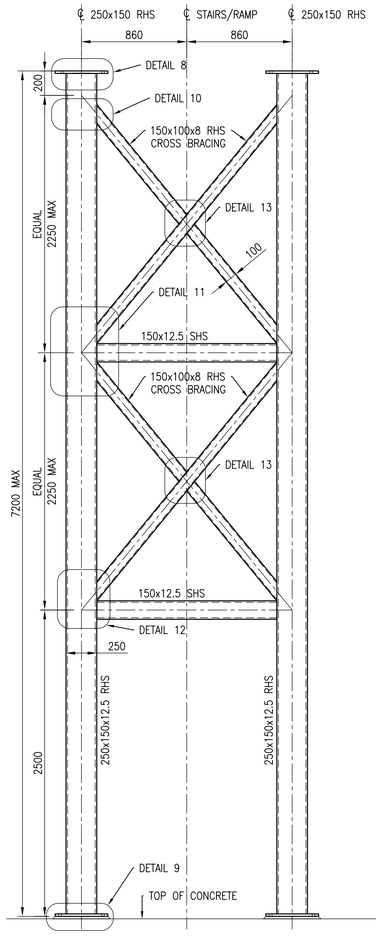

2 LEG TRESTLE TYPE 1 ELEVATION
4.95m TO 7.2m
SCALE 1:25

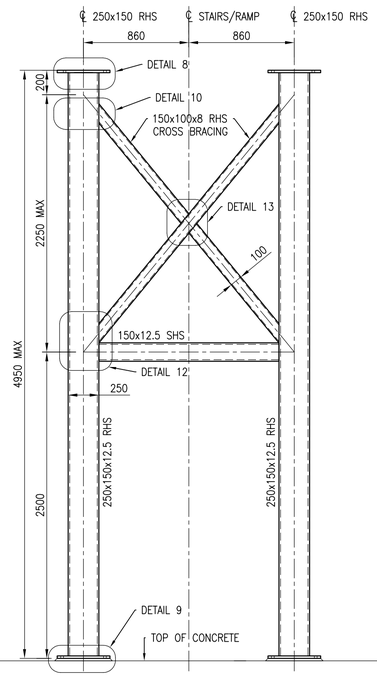

2 LEG TRESTLE TYPE 2 ELEVATION
3.625m TO 4.95m
SCALE 1:25

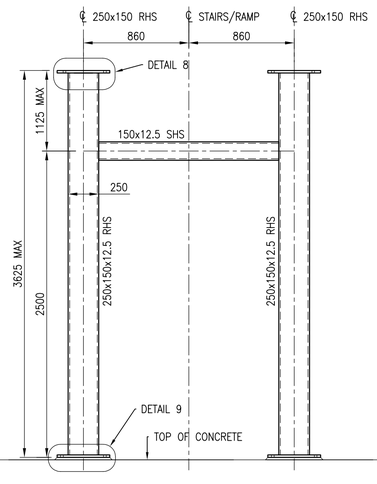

2 LEG TRESTLE TYPE 3 ELEVATION
2.75m TO 3.625m
SCALE 1:25

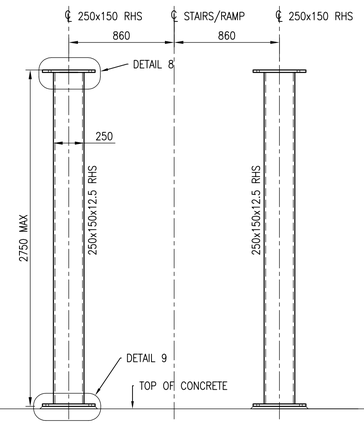

2 LEG TRESTLE TYPE 4 ELEVATION
UP TO 2.75m
SCALE 1:25

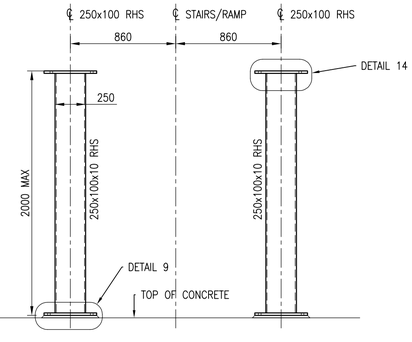

2 LEG TRESTLE TYPE 5 ELEVATION
UP TO 2.00m FOR RAMPS ONLY
SCALE 1:25

Rev	Date	Description of revision	Design'd	C'kd
E	10.07.15	FINAL ISSUE	BC	SWMF
D	18.06.15	FINAL ISSUE	BC	SWMF
C	25.07.14	THIRD ISSUE	BC	SWMF
B	02.07.14	SECOND ISSUE	CJF	SWMF
P4	24.10.13	FORM B APPROVAL	KKK	SWMF
P3	10.09.13	DRAFT	KKK	SWMF
P2	06.05.11	For Information	SzT	SWF
P1	09.02.11	FORM A APPROVAL	GPR	SWF
A	18.04.08	FIRST ISSUE	GPR	NGAY

Network Rail

Network Rail Infrastructure Ltd. Registered Office: Kings Place, 90 York Way, London, N1 9AG

Approved	A. LUNDBERG	Investment Projects Building & Civils		
	Name	Position	Signature	Date

Master copy with original signatures held by Network Rail HQ CIVIL ENGINEERING STANDARD DESIGN

© COPYRIGHT NETWORK RAIL 2011

NON–STATION FOOTBRIDGES STANDARD DRGS AND DETAILS

FOOTBRIDGE SUPERSTRUCTURE SUPPORTS STAIR AND RAMP TRESTLES

Scale	AS SHOWN	
Drawing Number	NR/CIV/SD/411	REV. E

Full document details: NR NR-CIV-SD-411 ISSUE E 2015

Documents
Document Sharing Hub

Licensee:nilesh vidwansh(589841002), User:sam, albert
Date/Time:Wed Jun 08 08:44:00 2016

Copyright Network Rail
Provided by IHS under licence with Network Rail
No reproduction or networking permitted without licence from IHS