Supplementary Information

The following information is associated with Network Rail Standard:
NR CIV/SD/412 Rev E

Additional Content Access

Click the link below to access CAD version of this drawing.

CAD Drawing

- CIV/SD/412

If you have any questions, or need assistance, please contact **IHS Support**

Information accessed via the links above is the property of the Copyright holder

IHS Additional Content Page

--`,,,,,`,,,,,`,,`,,,,,,,``-`-`,,`,,`,`,,`---

Documents
Document Sharing Hub

Copyright Network Rail
Provided by IHS under license with Network Rail
No reproduction or networking permitted without license from IHS
Full document details: NR NR-CIV-SD-412 ISSUE E 2015

Licensee=Weston Williamson/5989497001, User=sam, albett
Not for Resale, 03/27/2016 18:59:02 MDT

DO NOT SCALE THIS DRAWING

DRAWING No. NR/CIV/SD/412

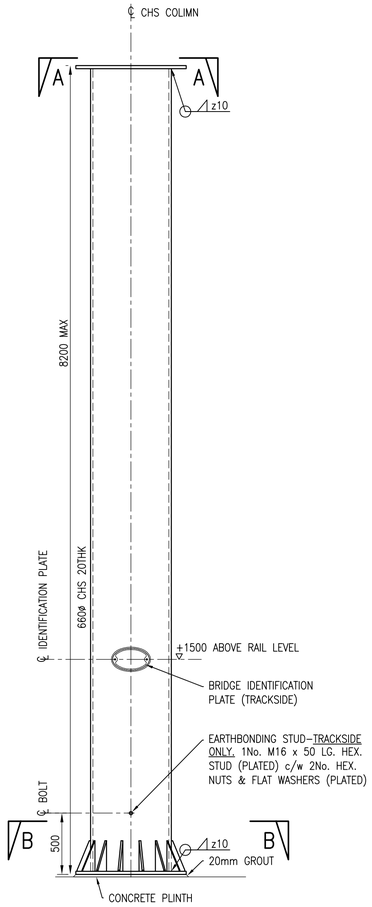

MAIN SPAN SUPPORT COLUMN

660ø CHS
SCALE 1:25

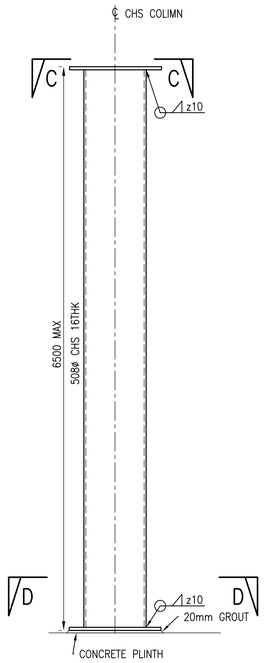

STAIR/RAMP SUPPORT COLUMN

508ø CHS
SCALE 1:25

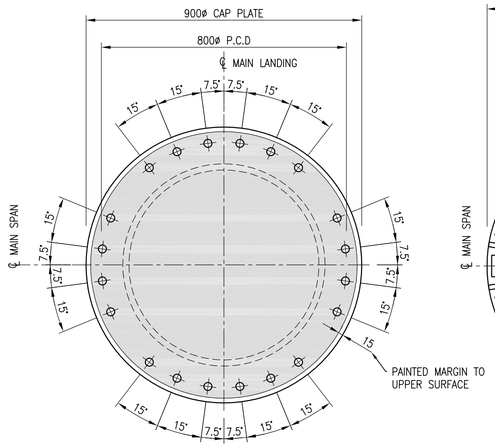

25THK CAP PLATE WITH 20 No. 30ø HOLES FOR M24 HR 8.8 BOLTS. UPPER SURFACE TO BE PREPARED AS FAYING SURFACE (SEE DRG 400) EXCEPT 15mm MARGIN TO PERIMETER. BOLTS TO BE SUPPLIED WITH A STANDARD WASHER AND A 70x70x8 WASHER PLATE (TO U/SIDE OF COLUMN CAP PLATE)

SECTION A–A

SCALE 1:10

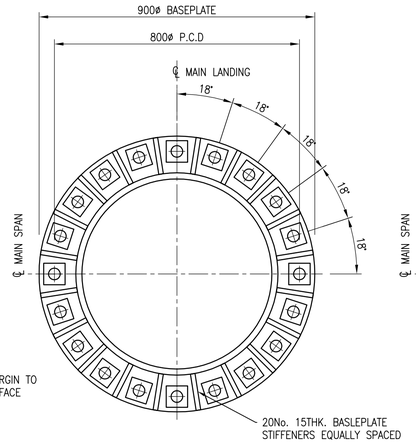

25THK BASEPLATE WITH 20 No. 38ø HOLES FOR M30 HOLDING DOWN BOLTS

SECTION B–B

SCALE 1:10

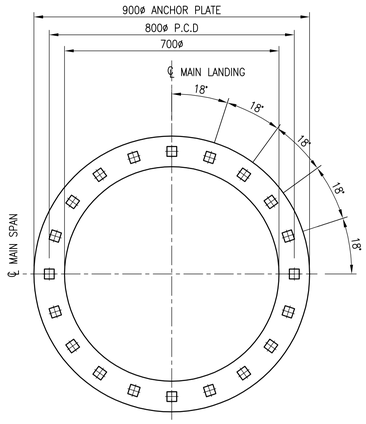

2 No. PLATES REQUIRED AS FOLLOWS:–
25THK ANCHOR PLATE WITH 20 No. SQUARE HOLES FOR M30 BOLT ASSEMBLIES
10THK INSTALLATION TEMPLATE WITH M30 NUTS & WASHERS ABOVE & BELOW PLATE

DETAIL OF ANCHOR PLATE & INSTALLATION TEMPLATE

660ø CHS
SCALE 1:10

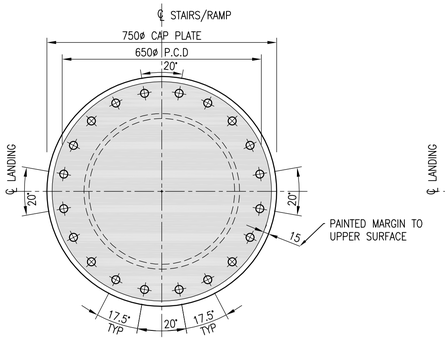

25THK CAP PLATE WITH 20 No. 30ø HOLES FOR M24 HR 8.8 BOLTS. UPPER SURFACE TO BE PREPARED AS FAYING SURFACE (SEE DRG 400) EXCEPT 15mm MARGIN TO PERIMETER. BOLTS TO BE SUPPLIED WITH A STANDARD WASHER AND A 70x70x8 WASHER PLATE (TO U/SIDE OF COLUMN CAP PLATE)

SECTION C–C

SCALE 1:10

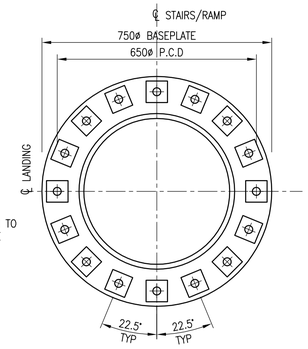

25THK BASEPLATE WITH 16 No. 38ø HOLES FOR M30 HOLDING DOWN BOLTS

SECTION D–D

SCALE 1:10

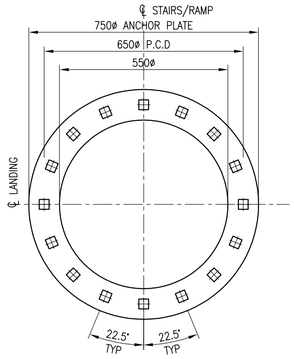

2 No. PLATES REQUIRED AS FOLLOWS:–
25THK ANCHOR PLATE WITH 16 No. SQUARE HOLES FOR M30 BOLT ASSEMBLIES
10THK INSTALLATION TEMPLATE WITH M30 NUTS & WASHERS ABOVE & BELOW PLATE

DETAIL OF ANCHOR PLATE & INSTALLATION TEMPLATE

508ø CHS
SCALE 1:10

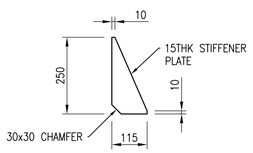

DETAIL OF BASEPLATE STIFFENER

SCALE 1:10

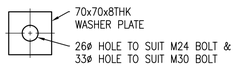

1 No. WASHER PLATE REQUIRED FOR EACH H.D BOLT PLACED ABOVE BASEPLATE & 1 No. WASHER PLATE REQUIRED FOR EACH CAP PLATE BOLT PLACED BELOW CAP PLATE

DETAIL OF WASHER PLATE

SCALE 1:5

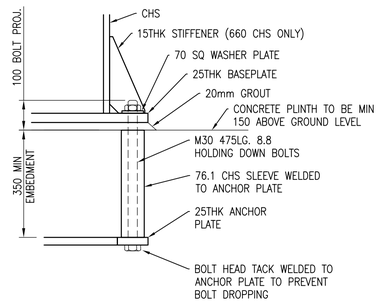

DETAIL OF HOLDING DOWN BOLTS

SCALE 1:10

NOTES

1. ALL DIMENSIONS IN MILLIMETRES UNLESS NOTED OTHERWISE.
2. THIS DRAWING TO BE READ IN CONJUNCTION WITH ALL NR/CIV/SD/400 SERIES DRAWINGS.
3. FOR GENERAL NOTES REFER TO DRAWING NR/CIV/SD/400.

Rev	Date	Description of revision	Design'd	C'kd
E	10.07.15	FINAL ISSUE	BC	SWMF
D	18.06.15	FINAL ISSUE	BC	SWMF
C	25.07.14	THIRD ISSUE	BC	SWMF
B	02.07.14	SECOND ISSUE	CJF	SWMF
P4	24.10.13	FORM B APPROVAL	KKK	SWMF
P3	10.09.13	DRAFT	KKK	SWMF
P2	06.05.11	For Information	SzT	SWF
P1	09.02.11	FORM A APPROVAL	GPR	SWF
A	18.04.08	FIRST ISSUE	GPR	NGAY

Network Rail

Network Rail Infrastructure Ltd. Registered Office: Kings Place, 90 York Way, London, N1 9AG

Approved	A. LUNDBERG	Investment Projects Building & Civils		
	Name	Position	Signature	Date

Master copy with original signatures held by Network Rail HQ CIVIL ENGINEERING STANDARD DESIGN

© COPYRIGHT NETWORK RAIL 2011

NON–STATION FOOTBRIDGES STANDARD DRGS AND DETAILS

FOOTBRIDGE SUPERSTRUCTURE SUPPORTS CHS COLUMNS

Scale	AS SHOWN	
Drawing Number	NR/CIV/SD/412	REV. E

Full document details: NR NR-CIV-SD-412 ISSUE E 2015

Documents Document Sharing Hub

Copyright Network Rail
Provided by IHS under licence with Network Rail
Reproduced by Network Rail under licence from IHS

Licensee=Network Rail Infrastructure Limited/5956112/01, User=sam, sfirst
No reproduction or networking permitted.