Supplementary Information

The following information is associated with Network Rail Standard:
NR CIV/SD/420 Rev E

Additional Content Access

Click the link below to access CAD version of this drawing.

CAD Drawing

- CIV/SD/420

If you have any questions, or need assistance, please contact **IHS Support**

Information accessed via the links above is the property of the Copyright holder

IHS Additional Content Page

Documents
Document Sharing Hub

Copyright Network Rail
Provided by IHS under license with Network Rail
No reproduction or networking permitted without license from IHS
Full document details: NR NR-CIV-SD-420 ISSUE E 2015

Licensee=Weston Williamson/5989497001, User=sam, albett
Not for Resale, 03/27/2016 18:59:32 MDT

DO NOT SCALE THIS DRAWING

DRAWING No. NR/CIV/SD/420

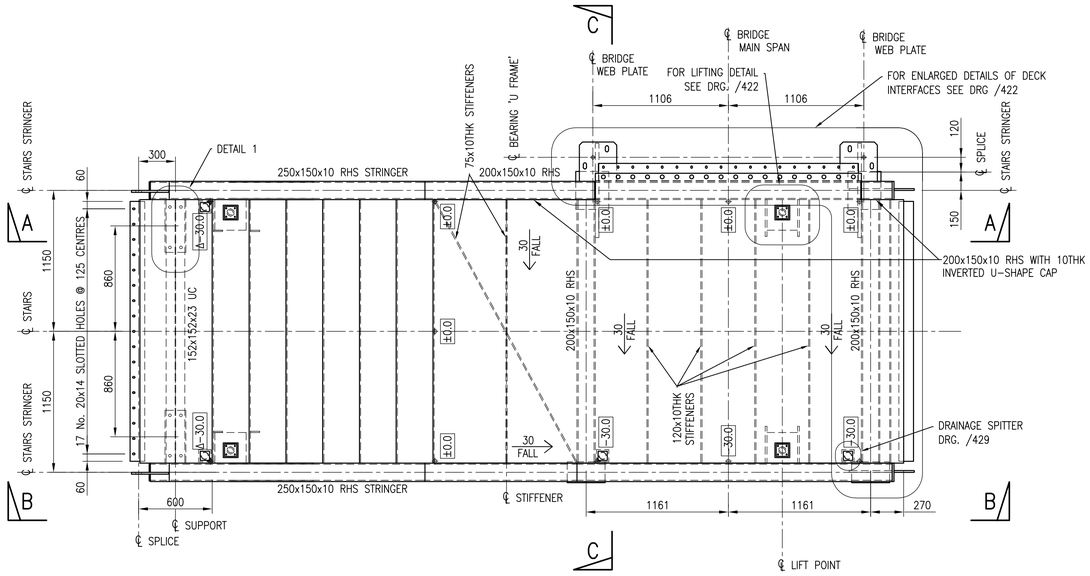

PLAN ON TOP FLIGHT & MAIN SPAN LANDING

SCALE 1:25

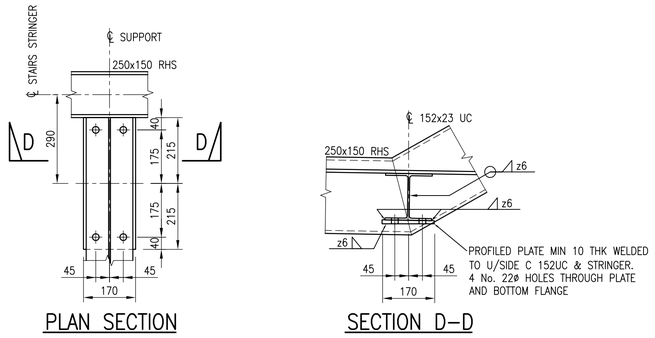

PLAN SECTION

SECTION D–D

DETAIL 1

SCALE 1:10

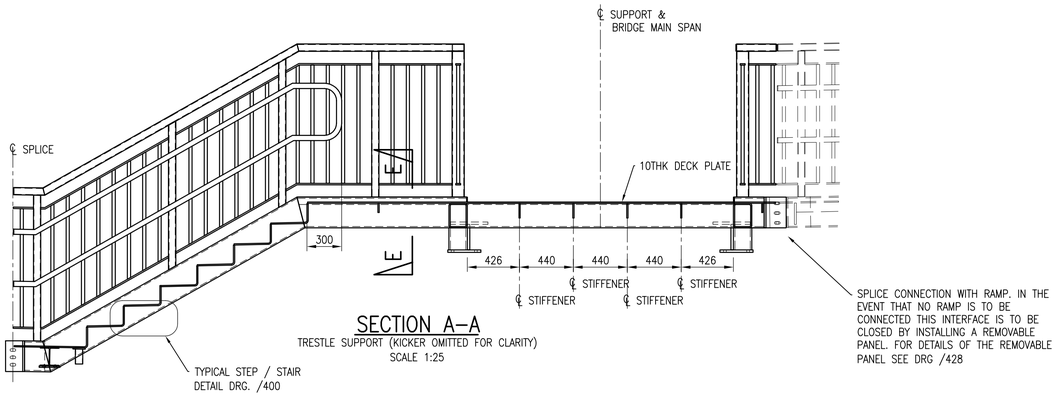

SECTION A–A

TRESTLE SUPPORT (KICKER OMITTED FOR CLARITY)

SCALE 1:25

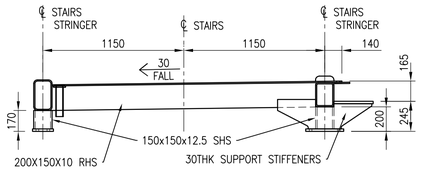

SECTION C–C

SCALE 1:25

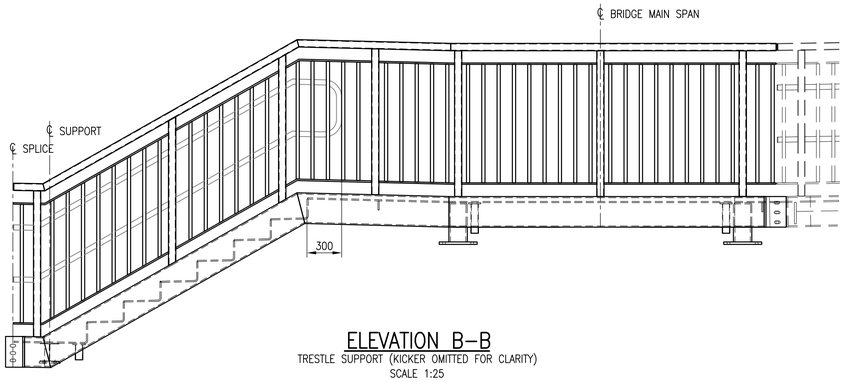

ELEVATION B–B

TRESTLE SUPPORT (KICKER OMITTED FOR CLARITY)

SCALE 1:25

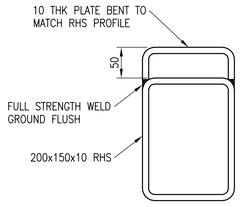

SECTION E–E

SCALE 1:5

NOTES

1. ALL DIMENSIONS IN MILLIMETRES UNLESS NOTED OTHERWISE.
2. THIS DRAWING TO BE READ IN CONJUNCTION WITH ALL NR/CIV/SD/400 SERIES DRAWINGS.
3. FOR GENERAL NOTES REFER TO DRAWING NR/CIV/SD/400.
4. FOR STAIRCASES AND LANDINGS THE MAXIMUM DISTANCE BETWEEN SUPPORTS IS 7250 FOR STRUCTURAL REASONS.
5. THE MAXIMUM NUMBER OF RISERS IN ANY FLIGHT IS 12.

Rev	Date	Description of revision	Design'd	C'kd
E	10.07.15	FINAL ISSUE	BC	SWMF
D	18.06.15	FINAL ISSUE	BC	SWMF
C	25.07.14	THIRD ISSUE	BC	SWMF
B	02.07.14	SECOND ISSUE	CJF	SWMF
P4	24.10.13	FORM B APPROVAL	KKK	SWMF
P3	10.09.13	DRAFT	KKK	SWMF
P2	06.05.11	For Information	SzT	SWF
P1	09.02.11	FORM A APPROVAL	GPR	SWF
A	18.04.08	FIRST ISSUE	GPR	NGAY

Network Rail

Network Rail Infrastructure Ltd. Registered Office: Kings Place, 90 York Way, London, N1 9AG

	Name	Position	Signature	Date
Approved	A. LUNDBERG	Investment Projects Building & Civils		

Master copy with original signatures held by Network Rail HQ CIVIL ENGINEERING STANDARD DESIGN

© COPYRIGHT NETWORK RAIL 2011

NON–STATION FOOTBRIDGES STANDARD DRGS AND DETAILS

FOOTBRIDGE SUPERSTRUCTURE STAIRCASE MAIN LANDING TRESTLE SUPPORT GENERAL ARRANGEMENT

Scale	AS SHOWN	
Drawing Number	NR/CIV/SD/420	REV. E

Full document details: NR NR-CIV-SD-420 ISSUE E 2015

Documents Document Sharing Hub

Licensee:Morgan Williamson 9958841001, User:sam. elliott Date/Time:Wed Jun 01 09:47:00 2016

Copyright Network Rail
Provided by IHS under license with Network Rail
No reproduction or networking permitted without license from IHS