Supplementary Information

The following information is associated with Network Rail Standard:
NR CIV/SD/423 Rev E

Additional Content Access

Click the link below to access CAD version of this drawing.

CAD Drawing

- CIV/SD/423

If you have any questions, or need assistance, please contact **IHS Support**

Information accessed via the links above is the property of the Copyright holder

IHS Additional Content Page

--`,,,,,,`,,,,,,`,,`,,,,,,,,``-`-`,,`,,`,`,,`---

Documents
Document Sharing Hub

Copyright Network Rail
Provided by IHS under license with Network Rail
No reproduction or networking permitted without license from IHS
Full document details: NR NR-CIV-SD-423 ISSUE E 2015

Licensee=Weston Williamson/5989497001, User=sam, albett
Not for Resale, 03/27/2016 18:59:58 MDT

DO NOT SCALE THIS DRAWING

DRAWING No. NR/CIV/SD/423

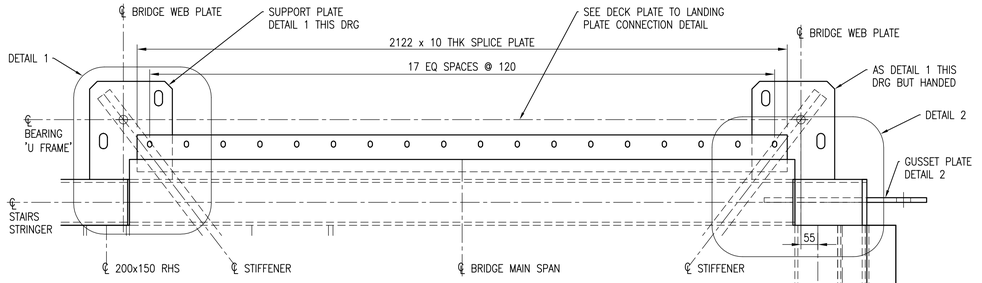

ENLARGED PLAN ON SPLICES

MAIN LANDING CONNECTION
SCALE 1:10

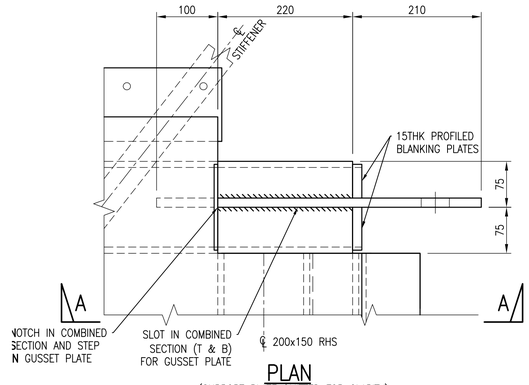

PLAN

(SUPPORT PLATE OMITTED FOR CLARITY)

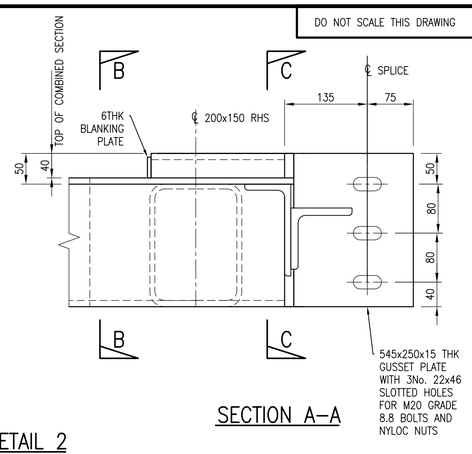

SECTION A–A

DETAIL 2

SCALE 1:5
(AT DECK LEVEL)

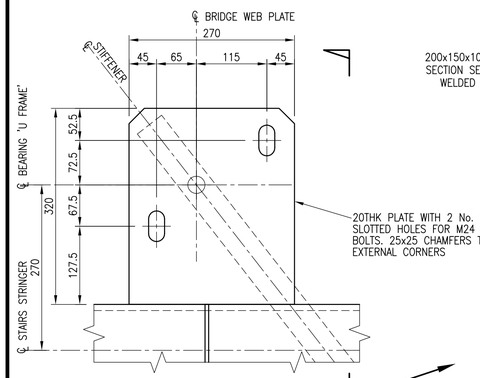

PLAN

(SPLICE PLATE OMITTED FOR CLARITY)

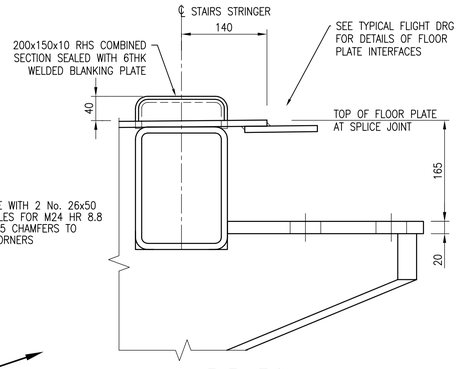

ELEVATION

DETAIL 1

SCALE 1:5
(AT SUPPORT LEVEL)

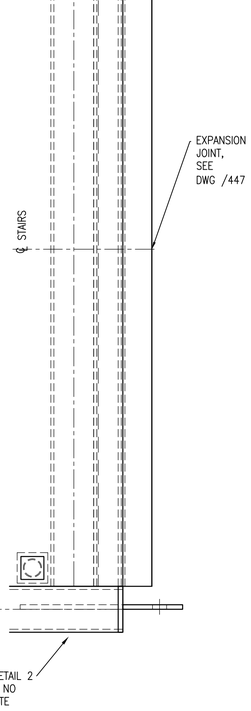

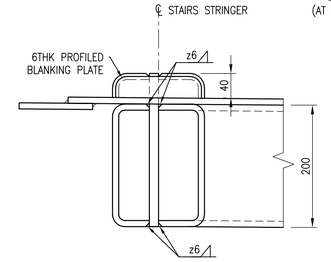

SECTION B–B

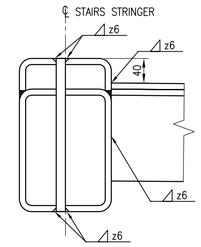

SECTION C–C

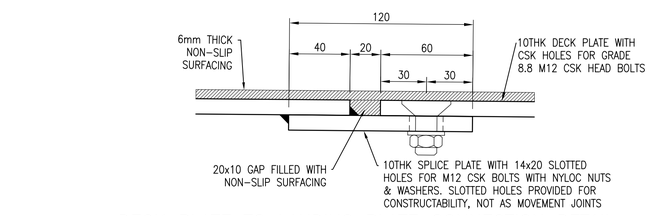

DECK PLATE TO LANDING PLATE CONNECTION DETAIL

SCALE 1:2

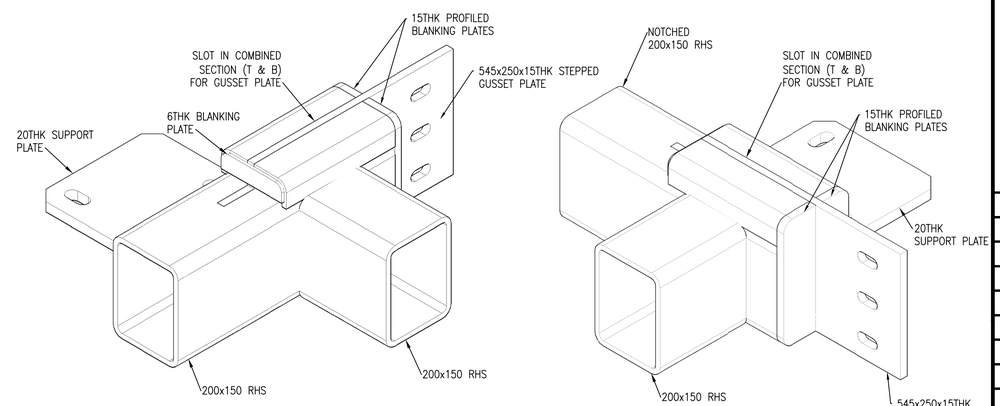

ISOMETRIC VIEWS OF DETAIL 2

(FLOOR PLATE OMITTED FOR CLARITY)

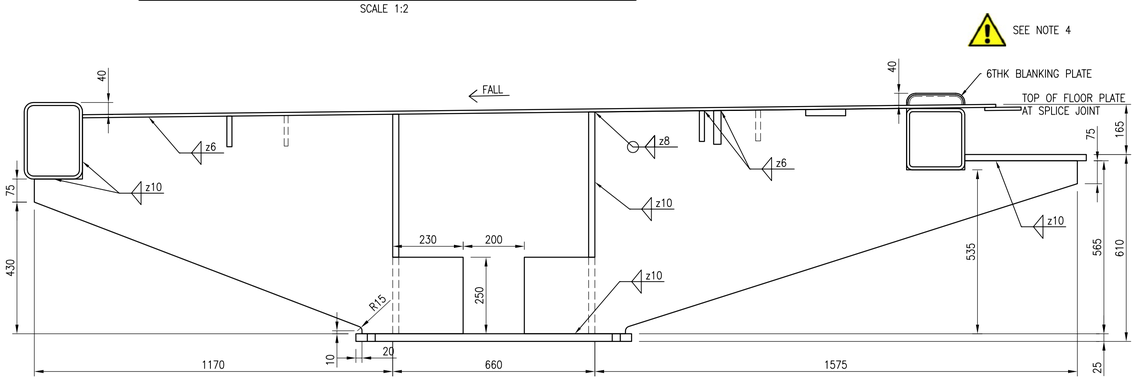

SECTION D–D

TRUE VIEW ON MAIN SUPPORT STIFFENERS (FROM DRG /421)
SCALE 1:10

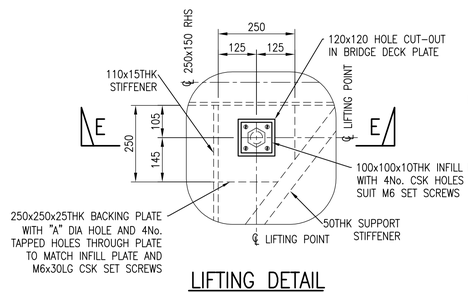

LIFTING DETAIL

MAIN DECK LANDING, CHS SUPPORT
SCALE 1:10

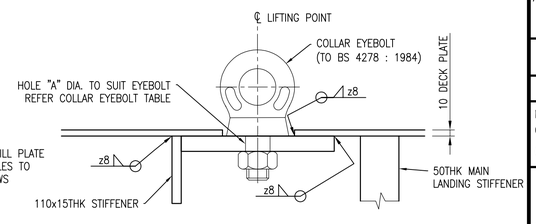

SECTION E–E

SCALE 1:5

NOTES

1. ALL DIMENSIONS IN MILLIMETRES UNLESS NOTED OTHERWISE.
2. THIS DRAWING TO BE READ IN CONJUNCTION WITH ALL NR/CIV/SD/400 SERIES DRAWINGS.
3. FOR GENERAL NOTES REFER TO DRAWING NR/CIV/SD/400.
4. FOR STAIRCASES AND LANDINGS THE MAXIMUM DISTANCE BETWEEN SUPPORTS IS 7250 FOR STRUCTURAL REASONS.
5. THE MAXIMUM NUMBER OF RISERS IN ANY FLIGHT IS 12.
6. SHS TO BE CONTINUOUS THROUGH CRUCIFORM STIFFENER. CRUCIFORM STIFFENER TO BE NOTCHED AROUND SHS SECTION. TOP OF SHS SECTION IS ALSO NOTCHED AT MAIN SPAN THRESHOLD TO ALLOW LANDING PLATE TO PASS OVER IT.

Rev	Date	Description of revision	Design'd	C'kd
E	10.07.15	FINAL ISSUE	BC	SWMF
D	18.06.15	FINAL ISSUE	BC	SWMF
C	25.07.14	THIRD ISSUE	BC	SWMF
B	02.07.14	SECOND ISSUE	CJF	SWMF
P4	24.10.13	FORM B APPROVAL	KKK	SWMF
P3	10.09.13	DRAFT	KKK	SWMF
P2	06.05.11	For Information	SzT	SWF
P1	09.02.11	FORM A APPROVAL	GPR	SWF
A	18.04.08	FIRST ISSUE	GPR	NGAY

Network Rail

Network Rail Infrastructure Ltd. Registered Office:
Kings Place, 90 York Way, London, N1 9AG

Approved	A. LUNDBERG	Investment Projects Building & Civils		
	Name	Position	Signature	Date

Master copy with original signatures held by Network Rail HQ
CIVIL ENGINEERING STANDARD DESIGN

© COPYRIGHT NETWORK RAIL 2011

NON–STATION FOOTBRIDGES STANDARD DRGS AND DETAILS

FOOTBRIDGE SUPERSTRUCTURE STAIRCASE MAIN LANDING CHS SUPPORT SECTIONS & DETAILS

Scale	AS SHOWN	
Drawing Number	NR/CIV/SD/423	REV. E

Full document details: NR NR-CIV SD-423 ISSUE E 2015
Documents
Document Sharing Hub
Licensee:nilanjan.vittoucom@99999.001. User:sam. ufirst
Copyright Network Rail
Provided by IHS under licence with Network Rail
Reproduced by permission of Network Rail. Licence No. 2011/0000/0001 Licence from IHS