Supplementary Information

The following information is associated with Network Rail Standard:
NR CIV/SD/424 Rev E

Additional Content Access

Click the link below to access CAD version of this drawing.

CAD Drawing

- CIV/SD/424

If you have any questions, or need assistance, please contact **IHS Support**

Information accessed via the links above is the property of the Copyright holder

IHS Additional Content Page

Documents
Document Sharing Hub

Copyright Network Rail
Provided by IHS under license with Network Rail
No reproduction or networking permitted without license from IHS
Full document details: NR NR-CIV-SD-424 ISSUE E 2015

Licensee=Weston Williamson/5989497001, User=sam, albett
Not for Resale, 03/27/2016 18:59:21 MDT

DO NOT SCALE THIS DRAWING

DRAWING No. NR/CIV/SD/424

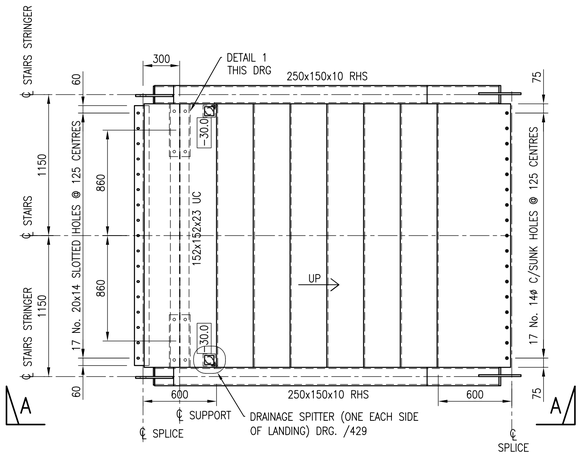

PLAN ON SPLICED STAIR HALF LANDING

SCALE 1:25

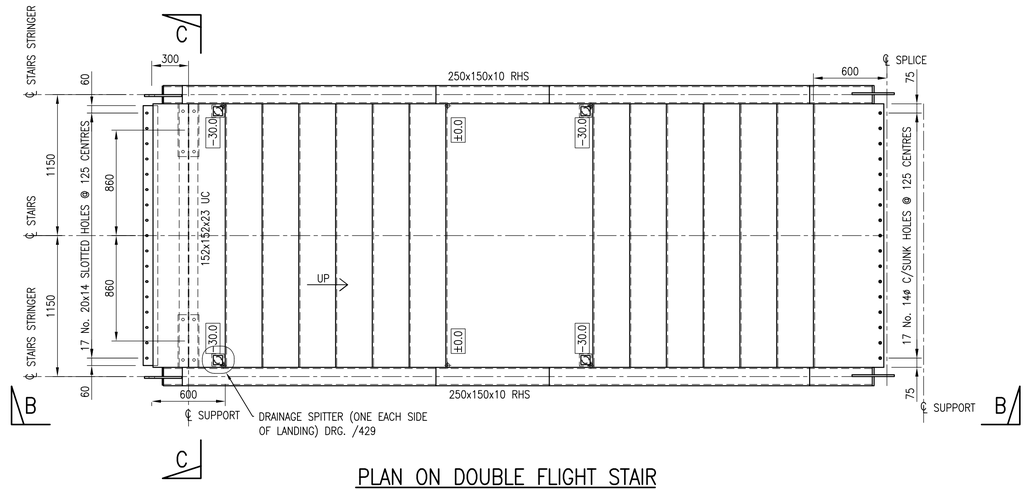

PLAN ON DOUBLE FLIGHT STAIR

SCALE 1:25

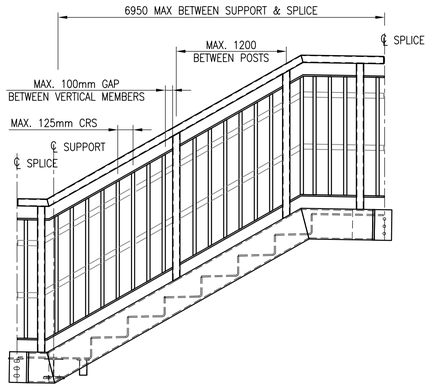

ELEVATION A–A

TRESTLE SUPPORT (KICKER OMITTED FOR CLARITY)
SCALE 1:25

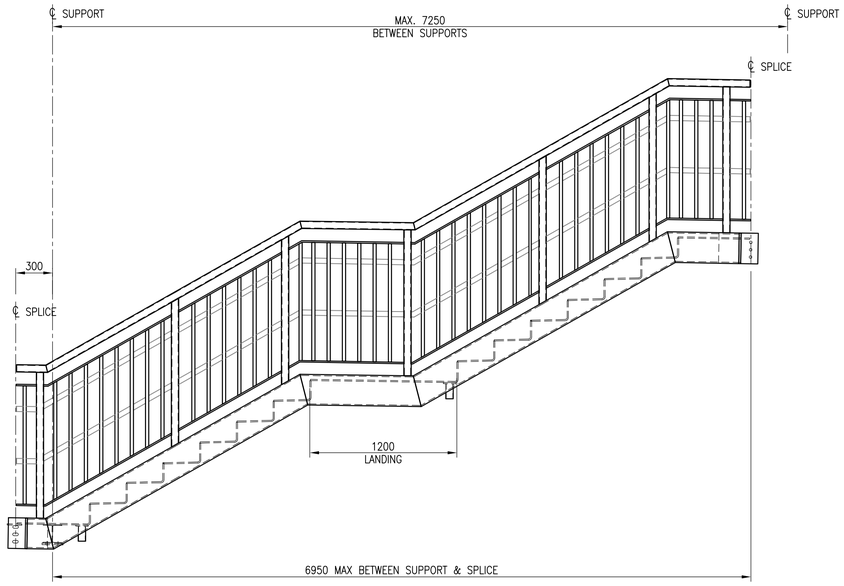

ELEVATION B–B

WITH LOWER & CENTRE TRESTLES SUPPORTS (KICKER OMITTED FOR CLARITY)
SCALE 1:25

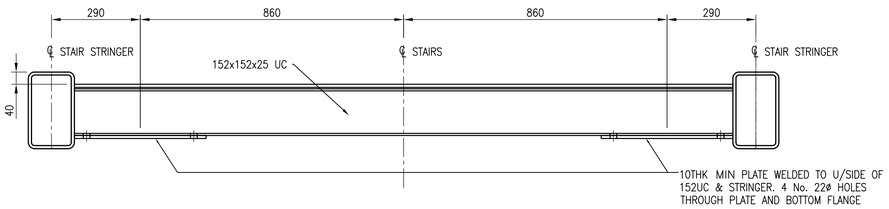

SECTION C–C

SECTION THROUGH SUPPORT STIFFENER
SCALE 1:10

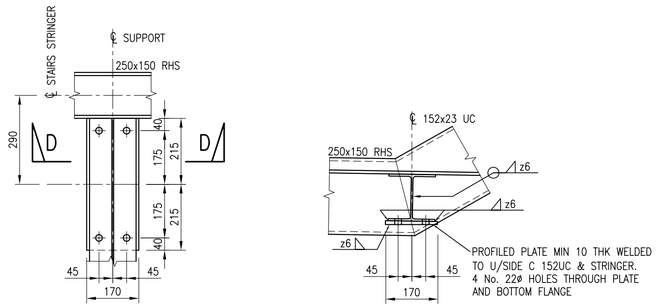

PLAN SECTION

SECTION D–D

DETAIL 1

SCALE 1:10

NOTES

1. ALL DIMENSIONS IN MILLIMETRES UNLESS NOTED OTHERWISE.
2. THIS DRAWING TO BE READ IN CONJUNCTION WITH ALL NR/CIV/SD/400 SERIES DRAWINGS.
3. FOR GENERAL NOTES REFER TO DRAWING NR/CIV/SD/400.
4. FOR STAIRCASES AND LANDINGS THE MAXIMUM DISTANCE BETWEEN SUPPORTS IS 7250 FOR STRUCTURAL REASONS.
5. THE MAXIMUM NUMBER OF RISERS IN ANY FLIGHT IS 12.
6. FOR THE DOUBLE FLIGHT STAIR AN INTERMEDIATE SUPPORT IS NOT REQUIRED IF THE OVERALL SPAN OF THE TWO FLIGHTS IS 7250 BETWEEN SUPPORTS, WHICH MEANS 2 FLIGHTS OF 9 RISERS CAN BE ACHIEVED. OTHERWISE AN INTERMEDIATE SUPPORT IS REQUIRED.
7. A DOUBLE FLIGHT STAIRCASE WITH NO INTERMEDIATE SUPPORT CANNOT BE USED WHEN A MANAGED DRAINAGE SYSTEM IS REQUIRED. REFER TO NR/CIV/SD/700 SERIES DRAWINGS.

Rev	Date	Description of revision	Design'd	C'kd
E	10.07.15	FINAL ISSUE	BC	SWMF
D	18.06.15	FINAL ISSUE	BC	SWMF
C	25.07.14	THIRD ISSUE	BC	SWMF
B	02.07.14	SECOND ISSUE	CJF	SWMF
P5	04.11.13	FORM B APPROVAL	WJH	SWMF
P4	24.10.13	FORM B APPROVAL	KKK	SWMF
P3	10.09.13	DRAFT	KKK	SWMF
P2	06.05.11	For Information	SzT	SWF
P1	09.02.11	FORM A APPROVAL	GPR	SWF
A	18.04.08	FIRST ISSUE	GPR	NGAY

Network Rail

Network Rail Infrastructure Ltd. Registered Office:
Kings Place, 90 York Way, London, N1 9AG

Approved	Name	Position	Signature	Date
	A. LUNDBERG	Investment Projects Building & Civils		

Master copy with original signatures held by Network Rail HQ
CIVIL ENGINEERING STANDARD DESIGN

© COPYRIGHT NETWORK RAIL 2011

NON–STATION FOOTBRIDGES STANDARD DRGS AND DETAILS

FOOTBRIDGE SUPERSTRUCTURE STAIRCASE FLIGHT TRESTLE SUPPORT GENERAL ARRANGEMENT

Scale	AS SHOWN	
Drawing Number	NR/CIV/SD/424	REV. E

Full document details: NR NR-CIV-SD-424 ISSUE E 2015
Document Sharing Hub
Lorenzo Villarroyo Villanueva(u0595845)(0001) User: swmf1 Date/Time: 2015/07/13 11:11:11
Copyright Network Rail
Provided by NRC under licence with Network Rail
Reproduced on behalf of Network Rail licence from NRC