Supplementary Information

The following information is associated with Network Rail Standard:
NR CIV/SD/428 Rev E

Additional Content Access

Click the link below to access CAD version of this drawing.

CAD Drawing

- CIV/SD/428

If you have any questions, or need assistance, please contact **IHS Support**

Information accessed via the links above is the property of the Copyright holder

IHS Additional Content Page

--`,,,,,,`,,,,,,`,,`,,,,,,,,`-`-`,,`,,`,`,,`---

Documents
Document Sharing Hub

Copyright Network Rail
Provided by IHS under license with Network Rail
No reproduction or networking permitted without license from IHS
Full document details: NR NR-CIV-SD-428 ISSUE E 2015

Licensee=Weston Williamson/5989497001, User=sam, albett
Not for Resale, 03/27/2016 18:59:28 MDT

Full document details: NR NR-CIV-SD-428 ISSUE E 2015

DO NOT SCALE THIS DRAWING

DRAWING No. NR/CIV/SD/428

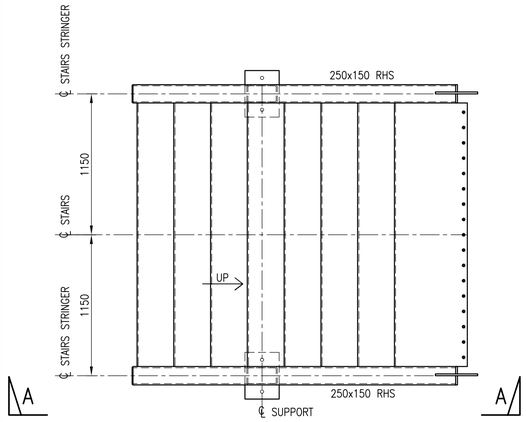

PLAN ON STAIR BASE (TYPICAL ALL STAIRS)

SCALE 1:25

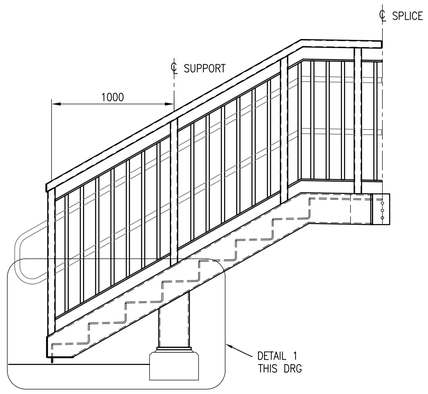

ELEVATION A–A

(KICKER OMITTED FOR CLARITY)
SCALE 1:25

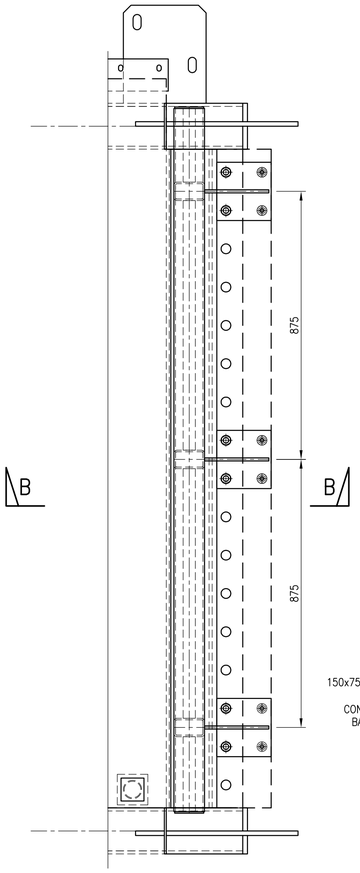

PLAN ON REMOVABLE PANEL FOR CHS AND TRESTLE SUPPORTS

(TO BE UTILISED WHEN RAMP IS BEING INSTALLED AT A LATER DATE)
SCALE 1:10

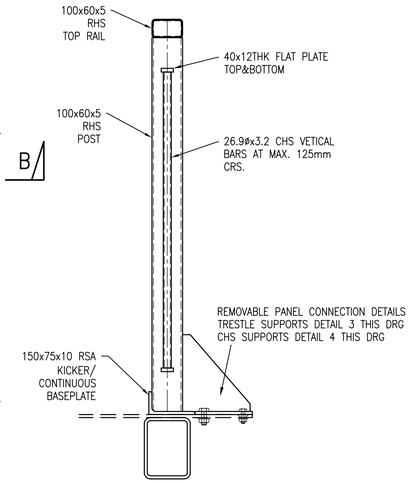

SECTION B–B

SCALE 1:10

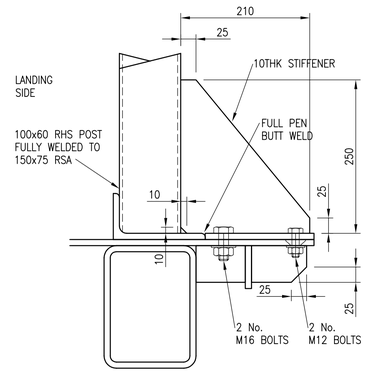

ELEVATION

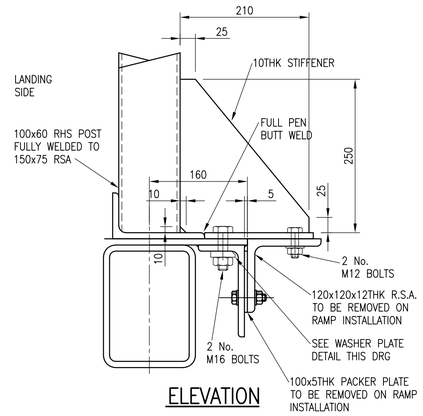

ELEVATION

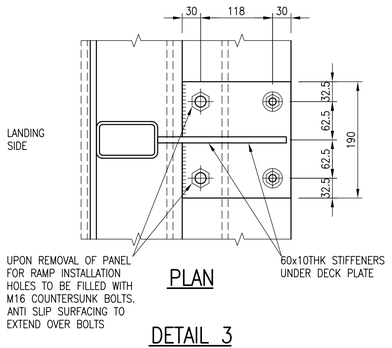

PLAN

DETAIL 3

REMOVABLE PANEL CONNECTION FOR TRESTLE SUPPORT
SCALE 1:5

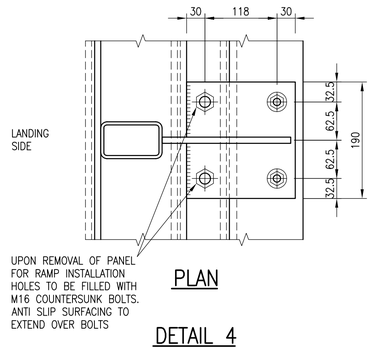

PLAN

DETAIL 4

REMOVABLE PANEL CONNECTION FOR CHS SUPPORT
SCALE 1:5

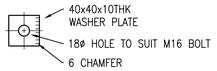

DETAIL OF WASHER PLATE

SCALE 1:5

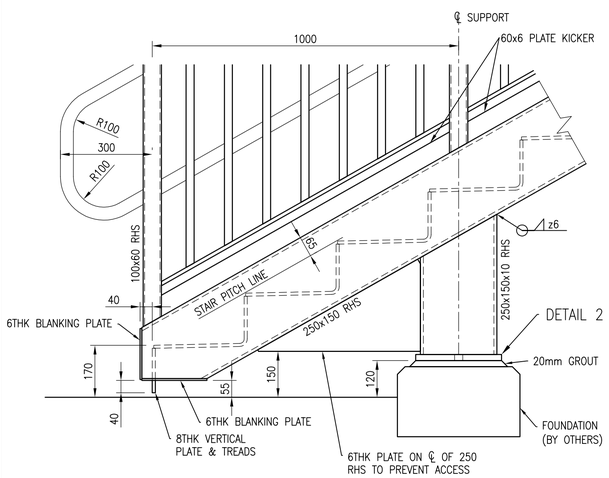

DETAIL 1

SCALE 1:10

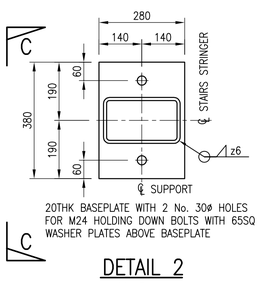

20THK BASEPLATE WITH 2 No. 30ø HOLES
FOR M24 HOLDING DOWN BOLTS WITH 65SQ
WASHER PLATES ABOVE BASEPLATE

DETAIL 2

SCALE 1:10

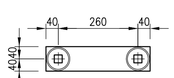

10THK PLATE WITH 2 No. 26SQ
HOLES FOR M24 GRADE 8.8 SQUARE
SHANK HOLDING DOWN BOLTS

ANCHOR PLATE

SCALE 1:10

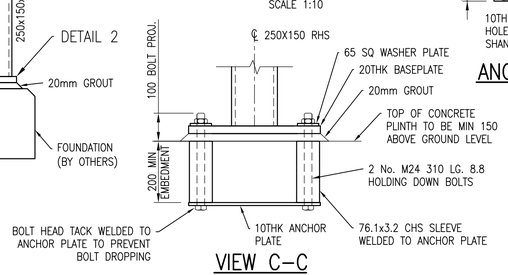

VIEW C–C

DETAIL OF HOLDING DOWN BOLTS

SCALE 1:10

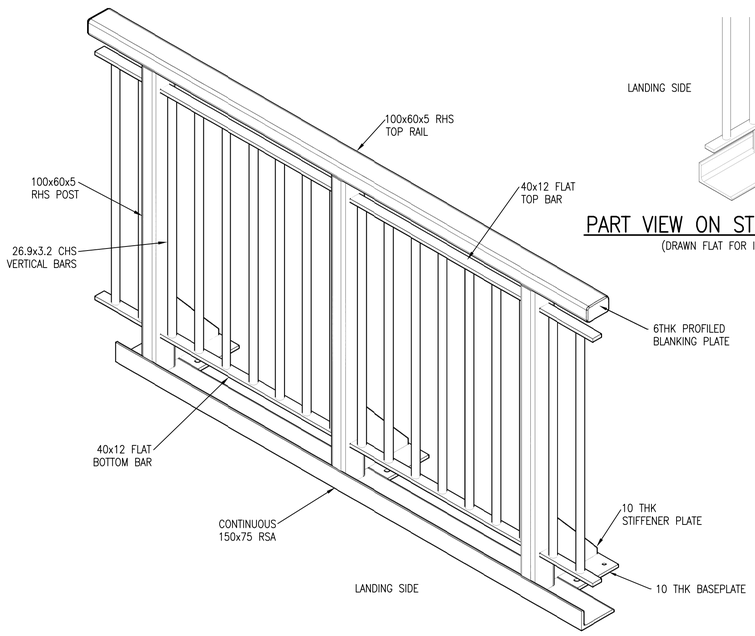

ISOMETRIC VIEW OF REMOVABLE PANEL

(DRAWN FLAT FOR INDICATIVE PURPOSES)

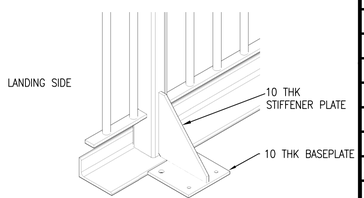

PART VIEW ON STIFFENER & BASEPLATE

(DRAWN FLAT FOR INDICATIVE PURPOSES)

NOTES

1. ALL DIMENSIONS IN MILLIMETRES UNLESS NOTED OTHERWISE.
2. THIS DRAWING TO BE READ IN CONJUNCTION WITH ALL NR/CIV/SD/400 SERIES DRAWINGS.
3. FOR GENERAL NOTES REFER TO DRAWING NR/CIV/SD/400.
4. FOR STAIRCASES AND LANDINGS THE MAXIMUM DISTANCE BETWEEN SUPPORTS IS 7250 FOR STRUCTURAL REASONS.
5. THE MAXIMUM NUMBER OF RISERS IN ANY FLIGHT IS 12.

Rev	Date	Description of revision	Design'd	C'kd
E	10.07.15	FINAL ISSUE	BC	SWMF
D	18.06.15	FINAL ISSUE	BC	SWMF
C	25.07.14	THIRD ISSUE	BC	SWMF
B	02.07.14	SECOND ISSUE	CJF	SWMF
P4	24.10.13	FORM B APPROVAL	KKK	SWMF
P3	10.09.13	DRAFT	KKK	SWMF
P2	06.05.11	For Information	SzT	SWF
P1	09.02.11	FORM A APPROVAL	GPR	SWF
A	18.04.08	FIRST ISSUE	GPR	NGAY

Network Rail

Network Rail Infrastructure Ltd. Registered Office:
Kings Place, 90 York Way, London, N1 9AG

Approved	A. LUNDBERG	Investment Projects Building & Civils		
	Name	Position	Signature	Date

Master copy with original signatures held by Network Rail HQ
CIVIL ENGINEERING STANDARD DESIGN

© COPYRIGHT NETWORK RAIL 2011

NON–STATION FOOTBRIDGES STANDARD DRGS AND DETAILS

FOOTBRIDGE SUPERSTRUCTURE STAIRCASE BASE AND REMOVABLE PANEL

Scale	AS SHOWN	
Drawing Number	NR/CIV/SD/428	REV. E

Documents
Document Sharing Hub

Copyright Network Rail
Provided by IHS under licence with Network Rail
Reproduced by IHS under licence from Network Rail
Licensee=Mapon Volkovich/9999999001, User=sam, sfirst
No part may be reproduced without prior permission