Supplementary Information

The following information is associated with Network Rail Standard:
NR CIV/SD/431 Rev E

Additional Content Access

Click the link below to access CAD version of this drawing.

CAD Drawing

- CIV/SD/431

If you have any questions, or need assistance, please contact **IHS Support**

Information accessed via the links above is the property of the Copyright holder

IHS Additional Content Page

Documents
Document Sharing Hub

Copyright Network Rail
Provided by IHS under license with Network Rail
No reproduction or networking permitted without license from IHS
Full document details: NR NR-CIV-SD-431 ISSUE E 2015

Licensee=Weston Williamson/5989497001, User=sam, albett
Not for Resale, 03/27/2016 18:58:31 MDT

Full document details: NR NR-CIV-SD-431 ISSUE E 2015

DO NOT SCALE THIS DRAWING

DRAWING No. NR/CIV/SD/431

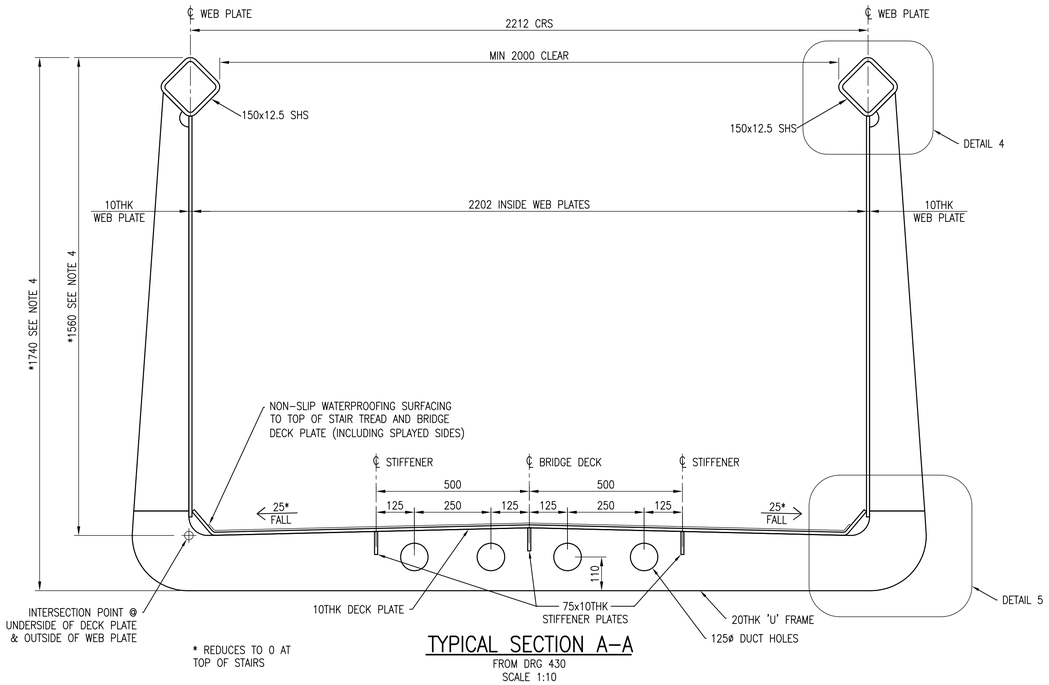

TYPICAL SECTION A–A

FROM DRG 430
SCALE 1:10

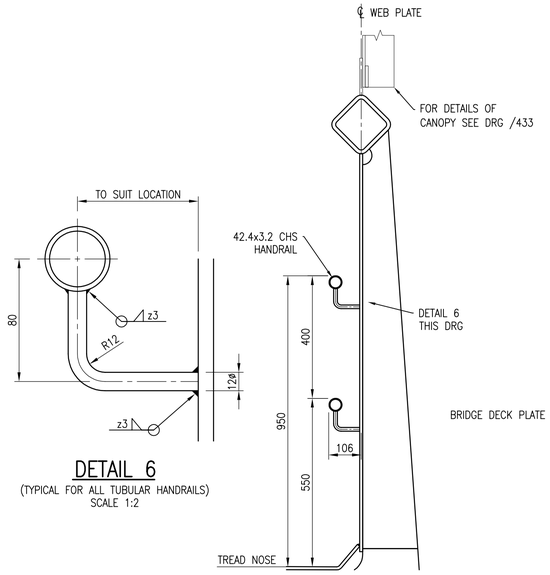

DETAIL 6

(TYPICAL FOR ALL TUBULAR HANDRAILS)
SCALE 1:2

SECTION E–E

(FROM DRG. /430 SECTION D–D)
SCALE 1:10

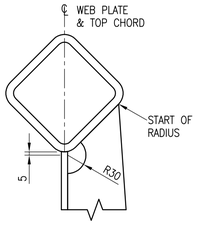

DETAIL 4

SCALE 1:5

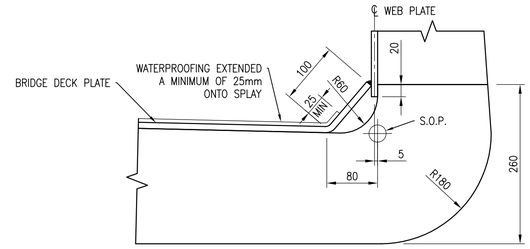

DETAIL 5

SCALE 1:5

NOTES

1. ALL DIMENSIONS IN MILLIMETRES UNLESS NOTED OTHERWISE.
2. THIS DRAWING TO BE READ IN CONJUNCTION WITH ALL NR/CIV/SD/400 SERIES DRAWINGS.
3. FOR GENERAL NOTES REFER TO DRAWING NR/CIV/SD/400.
4. PARAPET HEIGHT SHOWN IS FOR NON-ELECTRIFIED AREAS. FOR ELECTRIFIED AREAS SEE TUM SECTION 4.4.2.

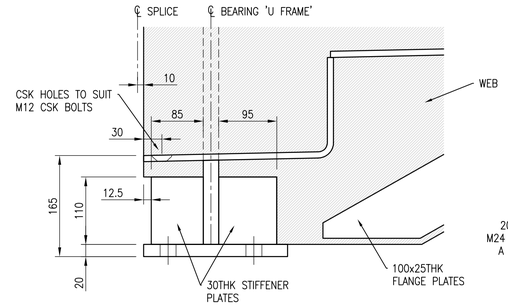

SECTION
(LOOKING INSIDE TOWARD OUTSIDE)

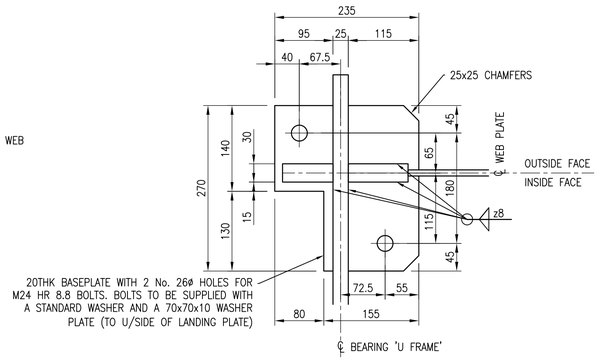

PLAN ON SECTION

DETAIL 1

BEARING DETAIL FOR STEPPED DECKS
(FROM DRG /430 PART ELEVATION ON STEPPED SPAN)
SCALE 1:5

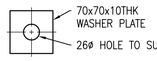

DETAIL OF WASHER PLATE

SCALE 1:5

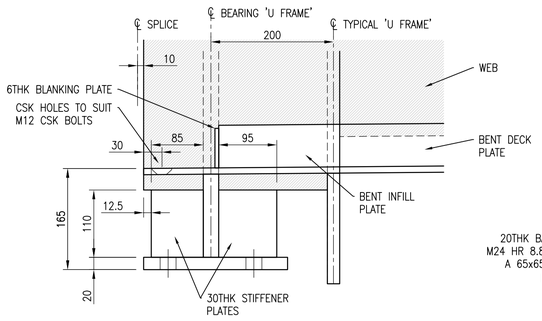

SECTION
(LOOKING FROM INSIDE TOWARD OUTSIDE)

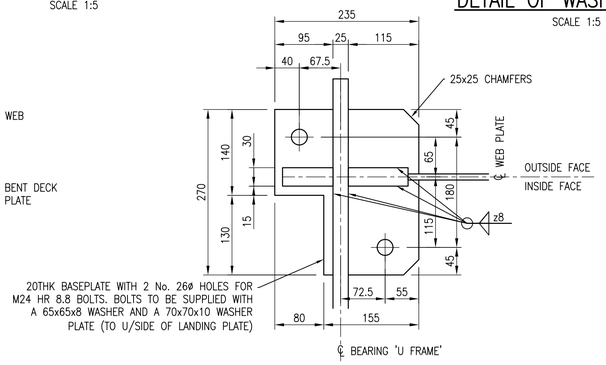

PLAN ON SECTION

DETAIL 2

BEARING DETAIL FOR FLAT DECKS
(FROM DRG /430 ELEVATION ON FLAT MAIN SPAN)
SCALE 1:5

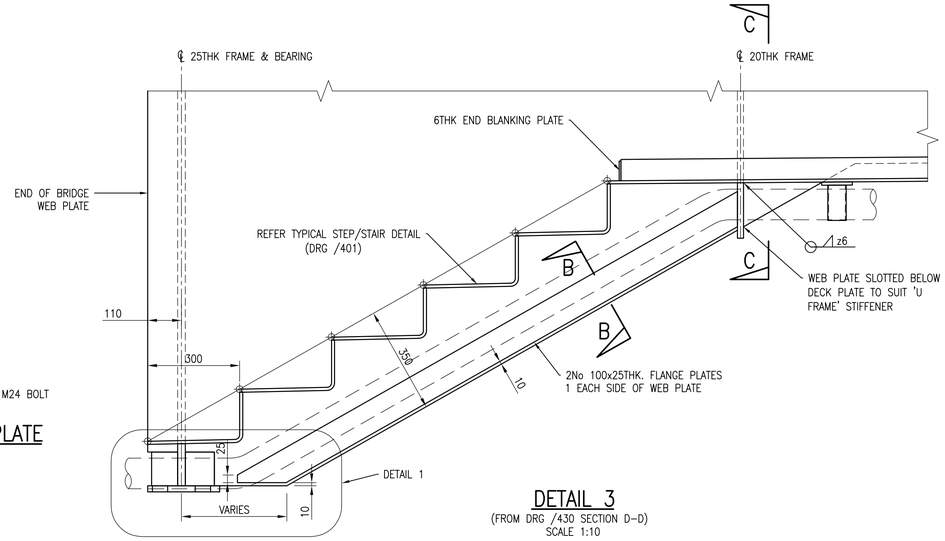

DETAIL 3

(FROM DRG /430 SECTION D–D)
SCALE 1:10

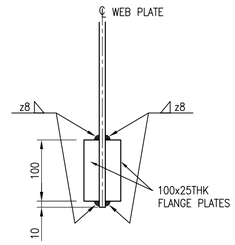

SECTION B–B

SCALE 1:5

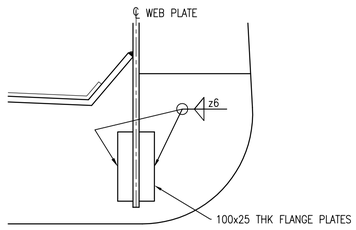

SECTION C–C

SCALE 1:5

Rev	Date	Description of revision	Design'd	C'kd
E	10.07.15	FINAL ISSUE	BC	SWMF
D	18.06.15	FINAL ISSUE	BC	SWMF
C	25.07.14	THIRD ISSUE	BC	SWMF
B	02.07.14	SECOND ISSUE	CJF	SWMF
P4	24.10.13	FORM B APPROVAL	KKK	SWMF
P3	10.09.13	DRAFT	KKK	SWMF
P2	06.05.11	For Information	SzT	SWF
P1	09.02.11	FORM A APPROVAL	GPR	SWF
A	18.04.08	FIRST ISSUE	GPR	NGAY

Network Rail

Network Rail Infrastructure Ltd. Registered Office: Kings Place, 90 York Way, London, N1 9AG

Approved	A. LUNDBERG	Investment Projects Building & Civils		
	Name	Position	Signature	Date

Master copy with original signatures held by Network Rail HQ
CIVIL ENGINEERING STANDARD DESIGN

© COPYRIGHT NETWORK RAIL 2011

NON–STATION FOOTBRIDGES STANDARD DRGS AND DETAILS

FOOTBRIDGE SUPERSTRUCTURE MAIN SPAN STRUCTURAL DETAILS

Scale	AS SHOWN	
Drawing Number	NR/CIV/SD/431	REV. E

Documents
Document Sharing Hub

Copyright Network Rail
Provided by IHS under licence with Network Rail
Licensee:Morgan Williamson-p5684/001, User:sam. allen
Not for resale
No reproduction without permission from IHS