Supplementary Information

The following information is associated with Network Rail Standard:
NR CIV/SD/432 Rev E

Additional Content Access

Click the link below to access CAD version of this drawing.

CAD Drawing

- CIV/SD/432

If you have any questions, or need assistance, please contact **IHS Support**

Information accessed via the links above is the property of the Copyright holder

IHS Additional Content Page

Documents
Document Sharing Hub

Copyright Network Rail
Provided by IHS under license with Network Rail
No reproduction or networking permitted without license from IHS
Full document details: NR NR-CIV-SD-432 ISSUE E 2015

Licensee=Weston Williamson/5989497001, User=sam, albett
Not for Resale, 03/27/2016 18:58:42 MDT

DO NOT SCALE THIS DRAWING

DRAWING No. NR/CIV/SD/432

NOTES

1. ALL DIMENSIONS IN MILLIMETRES UNLESS NOTED OTHERWISE.
2. THIS DRAWING TO BE READ IN CONJUNCTION WITH ALL NR/CIV/SD/400 SERIES DRAWINGS.
3. FOR GENERAL NOTES REFER TO DRAWING NR/CIV/SD/400.
4. REFER TO THE TUM FOR THE STRATEGY / GUIDANCE
5. THE RAIN WATER DRAINAGE DESIGN ILLUSTRATED IS INDICATIVE ONLY.
6. WHERE CONNECTING DRAINAGE IS PROVIDED REDUCE THE STANDARD SPITTER PIPE DROP LENGTH TO SUIT.

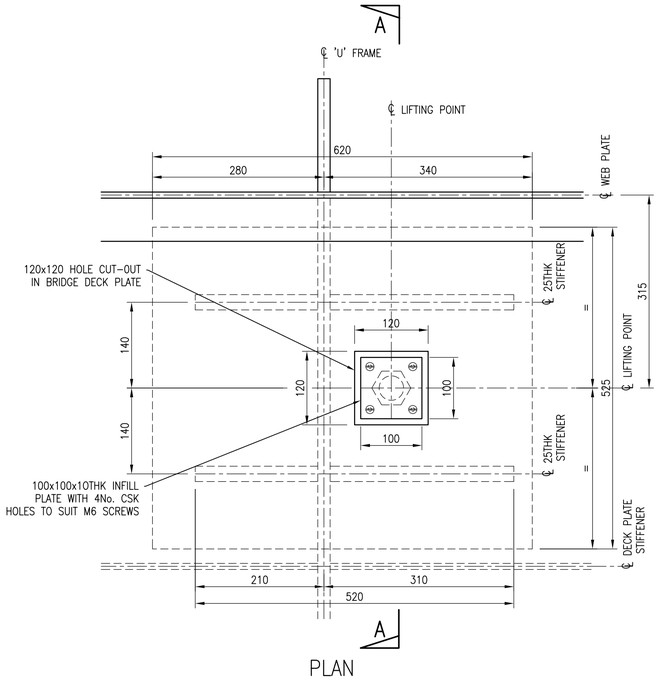

PLAN

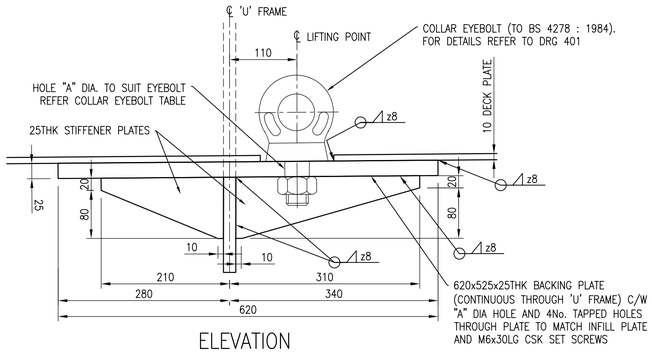

ELEVATION

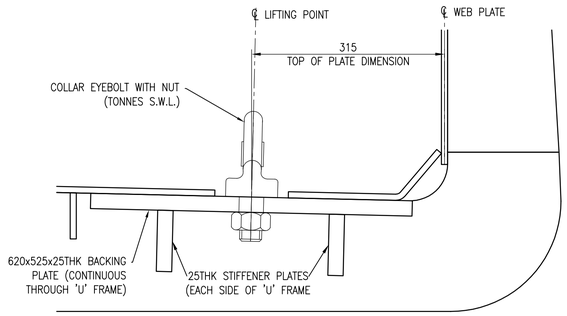

SECTION A–A

MAIN DECK LIFTING DETAIL

SCALE 1:5

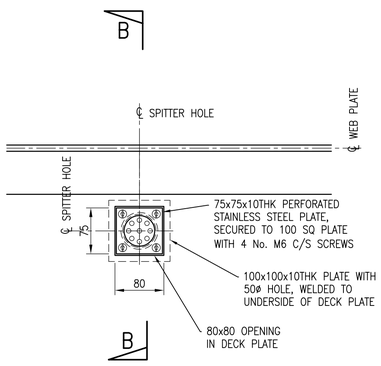

PLAN

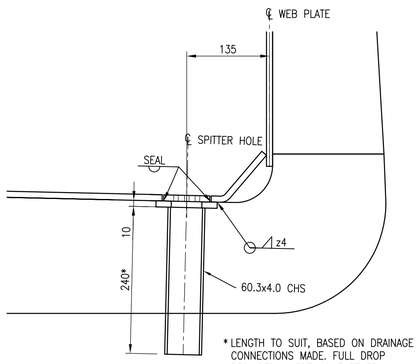

SECTION B–B

* LENGTH TO SUIT, BASED ON DRAINAGE CONNECTIONS MADE. FULL DROP REQUIRED WHERE NO FURTHER DRAINAGE CONNECTIONS MADE

DRAINAGE DETAIL

SCALE 1:5

OPTION 1, TO BE USED WHERE DRAINAGE PIPES ARE TO BE UTILISED

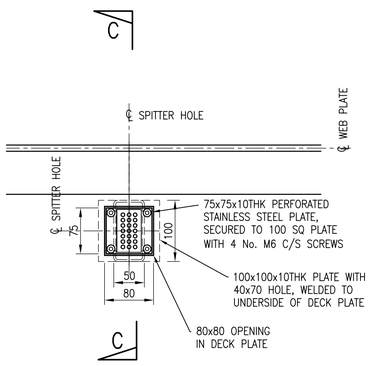

PLAN

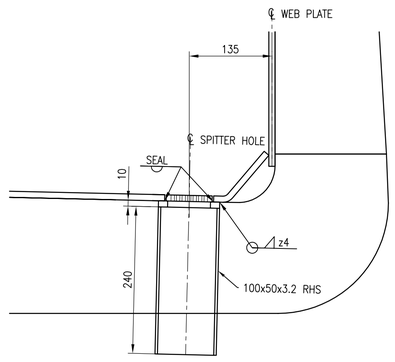

SECTION C–C

DRAINAGE DETAIL

SCALE 1:5

OPTION 2, MAY BE USED WHERE DRAINAGE PIPES ARE NOT BEING UTILISED

Rev	Date	Description of revision	Design'd	C'kd
E	10.07.15	FINAL ISSUE	BC	SWMF
D	18.06.15	FINAL ISSUE	BC	SWMF
C	25.07.14	THIRD ISSUE	BC	SWMF
B	02.07.14	SECOND ISSUE	CJF	SWMF
P4	24.10.13	FORM B APPROVAL	KKK	SWMF
P3	10.09.13	DRAFT	KKK	SWMF
P2	06.05.11	For Information	SzT	SWF
P1	09.02.11	FORM A APPROVAL	GPR	SWF
A	18.04.08	FIRST ISSUE	GPR	NGAY

Network Rail

Network Rail Infrastructure Ltd. Registered Office: Kings Place, 90 York Way, London, N1 9AG

Approved	Name	Position	Signature	Date
	A. LUNDBERG	Investment Projects Building & Civils		

Master copy with original signatures held by Network Rail HQ CIVIL ENGINEERING STANDARD DESIGN

© COPYRIGHT NETWORK RAIL 2011

NON–STATION FOOTBRIDGES STANDARD DRGS AND DETAILS

FOOTBRIDGE SUPERSTRUCTURE MAIN SPAN LIFTING AND DRAINAGE DETAILS

Scale	AS SHOWN	
Drawing Number	NR/CIV/SD/432	REV. E

Full document details: NR NR-CIV-SD-432 IssSUE E 2015

Document Sharing Hub

Licensee:nelson.wilkinson@atkins.com. User:sam. sfirst

Copyright Network Rail
Provided by IHS under licence with Network Rail
No reproduction or networking permitted without licence from IHS