Supplementary Information

The following information is associated with Network Rail Standard:
NR CIV/SD/433 Rev E

Additional Content Access

Click the link below to access CAD version of this drawing.

CAD Drawing

- CIV/SD/433

If you have any questions, or need assistance, please contact **IHS Support**

Information accessed via the links above is the property of the Copyright holder

IHS Additional Content Page

Documents
Document Sharing Hub

Copyright Network Rail
Provided by IHS under license with Network Rail
No reproduction or networking permitted without license from IHS
Full document details: NR NR-CIV-SD-433 ISSUE E 2015

Licensee=Weston Williamson/5989497001, User=sam, albett
Not for Resale, 03/27/2016 18:59:19 MDT

DO NOT SCALE THIS DRAWING

DRAWING No. NR/CIV/SD/433

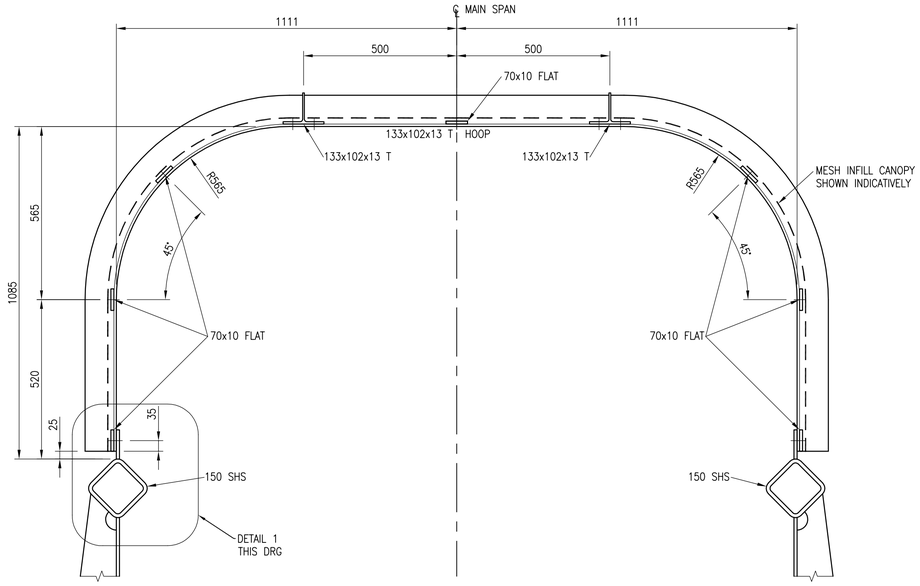

TYPICAL SECTION THROUGH BRIDGE SPAN WITH CANOPY

SCALE 1:10

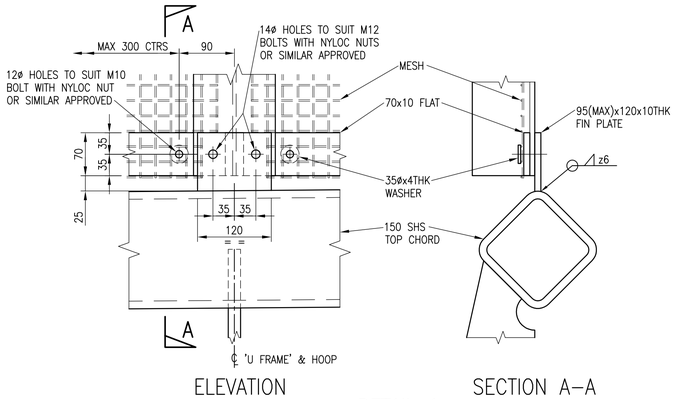

DETAIL 1

SCALE 1:5

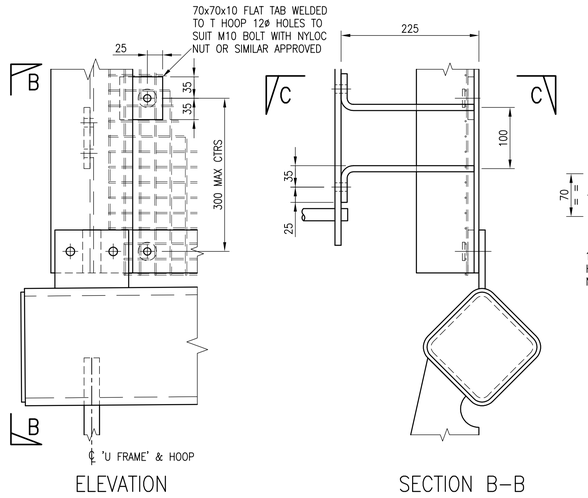

DETAIL 2

(DIMENSIONS ETC NOT SHOWN AS DETAIL 1)
SCALE 1:5

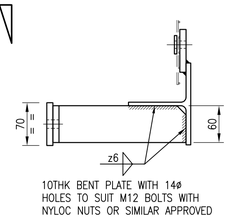

SECTION C–C

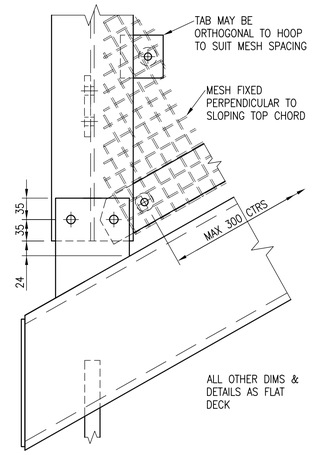

ALTERNATIVE DETAIL 2

(CANOPY HOOP AT STEPPED DECK))
SCALE 1:5

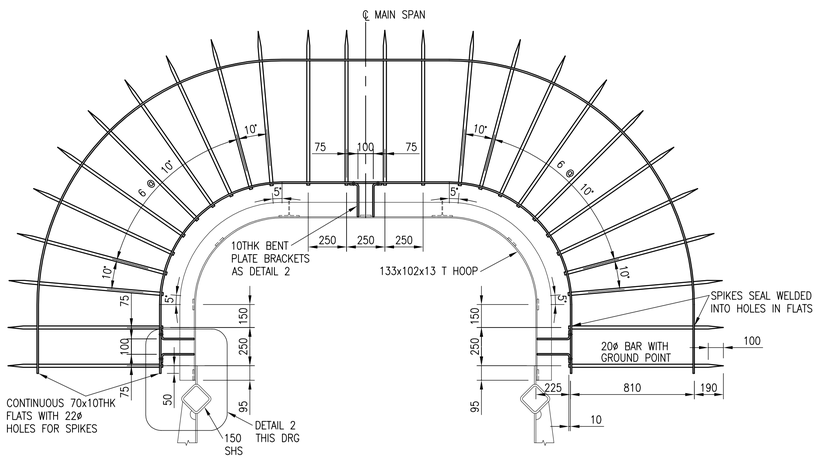

TYPICAL CHEVAUX DE FRISE

(DIMENSIONS OF HOOP AS TYPICAL SECTION)
SCALE 1:20

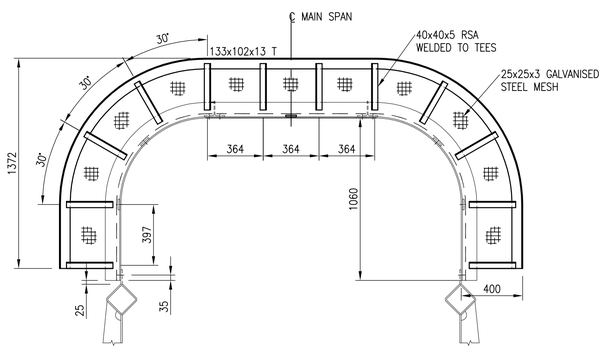

ALTERNATIVE CHEVAUX DE FRISE

(DIMENSIONS OF HOOP AS TYPICAL SECTION)
SCALE 1:20

FOR FUTURE PROOFING:
REFER TO TUM AND THE SAFETY, HEALTH AND ENVIRONMENT RISK ASSESSMENT FOR STRATEGY/GUIDANCE TO MITAGATE RISKS ASSOCIATED WITH FUTURE IN–SITU HOT WORKS.

NOTES

1. ALL DIMENSIONS IN MILLIMETRES UNLESS NOTED OTHERWISE.
2. THIS DRAWING TO BE READ IN CONJUNCTION WITH ALL NR/CIV/SD/400 SERIES DRAWINGS.
3. FOR GENERAL NOTES REFER TO DRAWING NR/CIV/SD/400.
4. MESH SIZE TO BE COMPLIANT WITH BS EN 50122 WITH A MAXIMUM 1200mm² MESH OPENING SIZE, eg 25x25x3 MESH
5. LAPS TO BE AT JOINT FIXINGS NOT MID SPAN, TO ENSURE SECURITY

Rev	Date	Description of revision	Design'd	C'kd
E	10.07.15	FINAL ISSUE	BC	SWMF
D	18.06.15	FINAL ISSUE	BC	SWMF
C	25.07.14	THIRD ISSUE	BC	SWMF
B	02.07.14	SECOND ISSUE	CJF	SWMF
P4	24.10.13	FORM B APPROVAL	KKK	SWMF
P3	10.09.13	DRAFT	KKK	SWMF
P2	06.05.11	For Information	SzT	SWF
P1	09.02.11	FORM A APPROVAL	GPR	SWF
A	18.04.08	FIRST ISSUE	GPR	NGAY

Network Rail

Network Rail Infrastructure Ltd. Registered Office:
Kings Place, 90 York Way, London, N1 9AG

Approved	A. LUNDBERG	Investment Projects Building & Civils		
	Name	Position	Signature	Date

Master copy with original signatures held by Network Rail HQ CIVIL ENGINEERING STANDARD DESIGN

© COPYRIGHT NETWORK RAIL 2011

NON–STATION FOOTBRIDGES STANDARD DRGS AND DETAILS

FOOTBRIDGE SUPERSTRUCTURE MAIN SPAN FURNITURE DETAILS

Scale	AS SHOWN	
Drawing Number	NR/CIV/SD/433	REV. E

Full document details: NR NR-CIV-SD-433 ISSUE E 2015
Documents Document Sharing Hub
Licensed Network Rail Provided by IHS under licence with Network Rail. Licence expiry date 31 Dec 2999. User name: allan
Copyright Network Rail Provided by IHS under licence from IHS