The following information is associated with Network Rail Standard:
NR CIV/SD/446 Rev E

Additional Content Access

Click the link below to access CAD version of this drawing.

CAD Drawing

- CIV/SD/446

If you have any questions, or need assistance, please contact **IHS Support**

Information accessed via the links above is the property of the Copyright holder

IHS Additional Content Page

Documents
Document Sharing Hub

Copyright Network Rail
Provided by IHS under license with Network Rail
No reproduction or networking permitted without license from IHS
Full document details: NR NR-CIV-SD-446 ISSUE E 2015

Licensee=Weston Williamson/5989497001, User=sam, albett
Not for Resale, 03/27/2016 18:59:05 MDT

DO NOT SCALE THIS DRAWING

DRAWING No. NR/CIV/SD/446

NOTES

1. ALL DIMENSIONS IN MILLIMETRES UNLESS NOTED OTHERWISE.
2. THIS DRAWING TO BE READ IN CONJUNCTION WITH ALL NR/CIV/SD/400 SERIES DRAWINGS.
3. FOR GENERAL NOTES REFER TO DRAWING NR/CIV/SD/400.

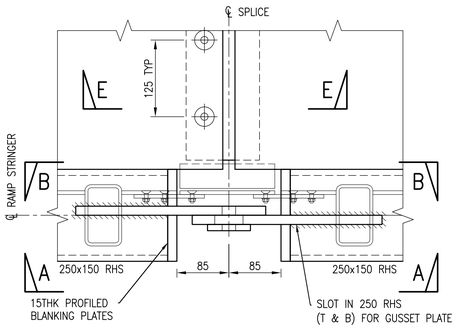

PLAN

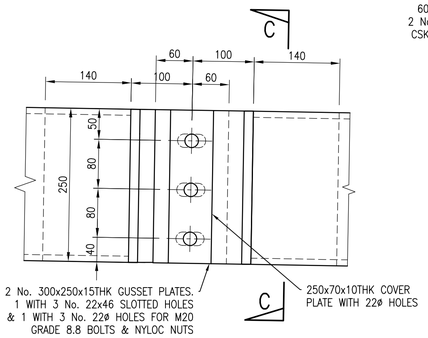

ELEVATION A–A

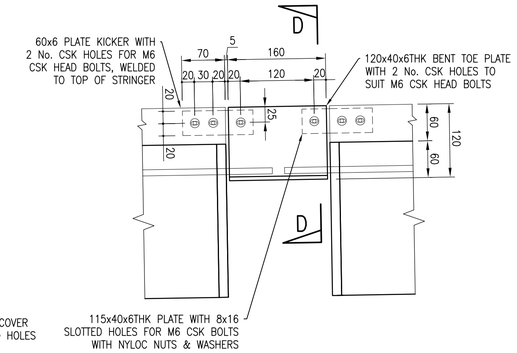

SECTION B–B

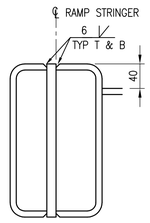

SECTION C–C

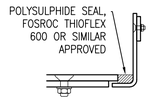

SECTION D–D

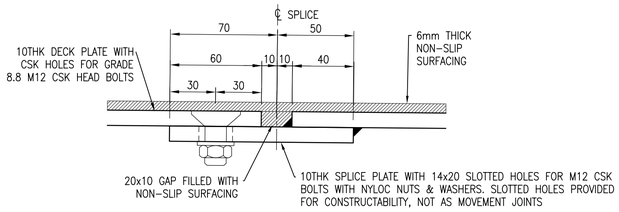

SECTION E–E

SCALE 1:2

SPLICE DETAIL

SCALE 1:5

Rev	Date	Description of revision	Design'd	C'kd
E	10.07.15	FINAL ISSUE	BC	SWMF
D	18.06.15	FINAL ISSUE	BC	SWMF
C	25.07.14	THIRD ISSUE	BC	SWMF
B	02.07.14	SECOND ISSUE	CJF	SWMF
P4	04.11.13	FORM B APPROVAL	WJH	SWMF
P3	24.10.13	FORM B APPROVAL	KKK	SWMF
P2	06.05.11	For Information	SzT	SWF
P1	09.02.11	FORM A APPROVAL	GPR	SWF
A	18.04.08	FIRST ISSUE	GPR	NGAY

Network Rail

Network Rail Infrastructure Ltd. Registered Office: Kings Place, 90 York Way, London, N1 9AG

Approved	A. LUNDBERG	Investment Projects Building & Civils		
	Name	Position	Signature	Date

Master copy with original signatures held by Network Rail HQ CIVIL ENGINEERING STANDARD DESIGN

© COPYRIGHT NETWORK RAIL 2011

NON–STATION FOOTBRIDGES STANDARD DRGS AND DETAILS

FOOTBRIDGE SUPERSTRUCTURE RAMP TRESTLE SUPPORT CONNECTION DETAILS

Scale	AS SHOWN	
Drawing Number	NR/CIV/SD/446	REV. E

Full document details: NR NR-CIV-SD-446 ISSUE E 2015

Documents
Document Sharing Hub

Copyright Network Rail
Provided by IHS under license with Network Rail
Licensee=Halcrow Yolande/5999100, User=sam, allen
No reproduction or networking permitted without license from IHS