Supplementary Information

The following information is associated with Network Rail Standard:
NR CIV/SD/447 Rev E

Additional Content Access

Click the link below to access CAD version of this drawing.

CAD Drawing

- CIV/SD/447

If you have any questions, or need assistance, please contact **IHS Support**

Information accessed via the links above is the property of the Copyright holder

IHS Additional Content Page

--`,,,,,,`,,,,,,`,,`,,,,,,,,`-`-`-,,`,,`,`,,`---
Copyright Network Rail
Provided by IHS under license with Network Rail
No reproduction or networking permitted without license from IHS
Full document details: NR NR-CIV-SD-447 ISSUE E 2015
Licensee=Weston Williamson/5989497001, User=sam, albett
Not for Resale, 03/27/2016 18:57:56 MDT

DO NOT SCALE THIS DRAWING

DRAWING No. NR/CIV/SD/447

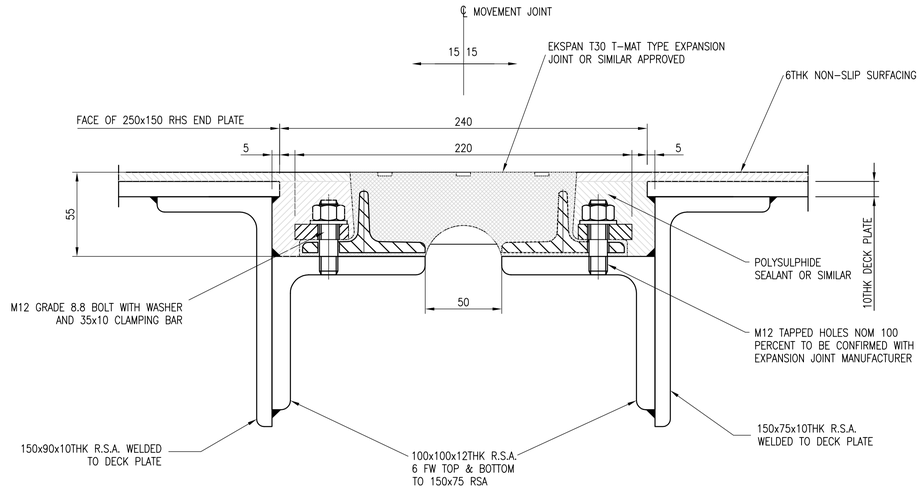

EXPANSION JOINT – TYPE 1

DETAIL FOR HIGH FOOTFALL ONLY (AT STATIONS)

SCALE 1:2

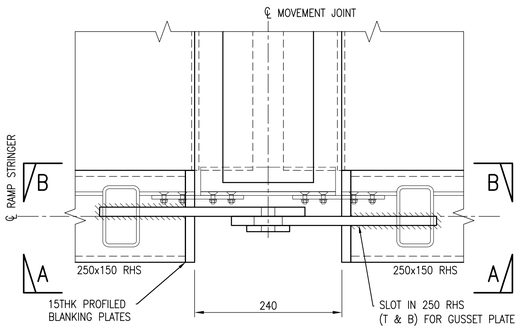

PLAN

SCALE 1:5

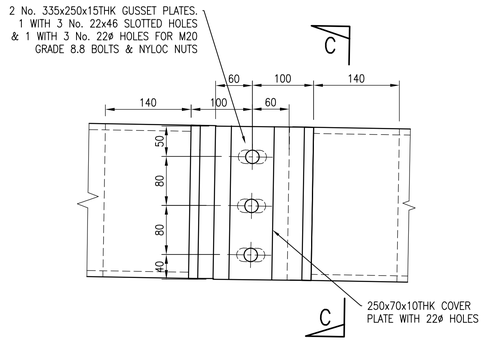

ELEVATION A–A

SCALE 1:5

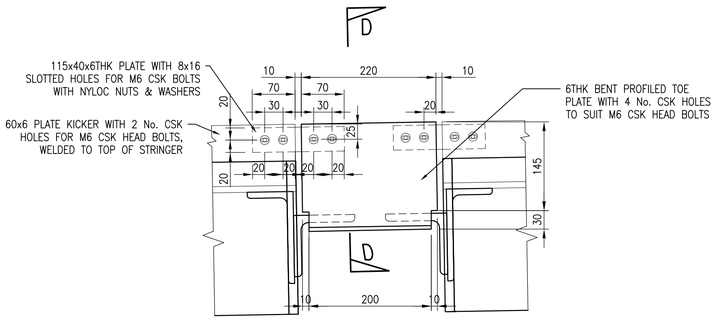

SECTION B–B

(MOVEMENT JOINT AND SURFACING OMITTED FOR CLARITY)

SCALE 1:5

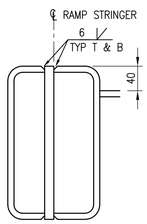

SECTION C–C

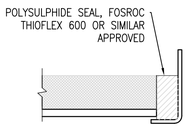

SECTION D–D

SPLICE DETAIL

SCALE 1:5

NOTES

1. ALL DIMENSIONS IN MILLIMETRES UNLESS NOTED OTHERWISE.
2. THIS DRAWING TO BE READ IN CONJUNCTION WITH ALL NR/CIV/SD/400 SERIES DRAWINGS.
3. FOR GENERAL NOTES REFER TO DRAWING NR/CIV/SD/400.

Rev	Date	Description of revision	Design'd	C'kd
E	10.07.15	FINAL ISSUE	BC	SWMF
D	18.06.15	FINAL ISSUE	BC	SWMF
C	25.07.14	THIRD ISSUE	BC	SWMF
B	02.07.14	SECOND ISSUE	CJF	SWMF
P3	24.10.13	FORM B APPROVAL	KKK	SWMF
P2	06.05.11	For Information	SzT	SWF
P1	09.02.11	FORM A APPROVAL	GPR	SWF
A	18.04.08	FIRST ISSUE	GPR	NGAY

Network Rail

Network Rail Infrastructure Ltd. Registered Office: Kings Place, 90 York Way, London, N1 9AG

Approved	A. LUNDBERG	Investment Projects Building & Civils		
	Name	Position	Signature	Date

Master copy with original signatures held by Network Rail HQ CIVIL ENGINEERING STANDARD DESIGN

© COPYRIGHT NETWORK RAIL 2011

NON–STATION FOOTBRIDGES STANDARD DRGS AND DETAILS

FOOTBRIDGE SUPERSTRUCTURE RAMP HIGH FOOTFALL CHS SUPPORT CONNECTION DETAILS

Scale	AS SHOWN	
Drawing Number	NR/CIV/SD/447	REV. E

Full document details: NR NR-CIV-SD-447 ISSUE E 2015

Licensed Member Williams Lea 01595612001 User:sam. elliott Date/Time Downloaded: 01/07/2015 15:17:11

Copyright Network Rail
Provided by IHS under licence with Network Rail
No reproduction or networking permitted without licence from IHS

AVA Documents
Document Sharing Hub