Supplementary Information

The following information is associated with Network Rail Standard:
NR CIV/SD/452 Rev A

Additional Content Access

Click the link below to access CAD version of this drawing.

CAD Drawing

- CIV/SD/452

If you have any questions, or need assistance, please contact **IHS Support**

Information accessed via the links above is the property of the Copyright holder

IHS Additional Content Page

Documents
Document Sharing Hub

Copyright Network Rail
Provided by IHS under license with Network Rail
No reproduction or networking permitted without license from IHS
Full document details: NR NR-CIV-SD-452 ISSUE A 2008

Licensee=Weston Williamson/5989497001, User=sam, albett
Not for Resale, 03/27/2016 23:52:40 MDT

DO NOT SCALE THIS DRAWING

DRAWING No. NR/CIV/SD/452

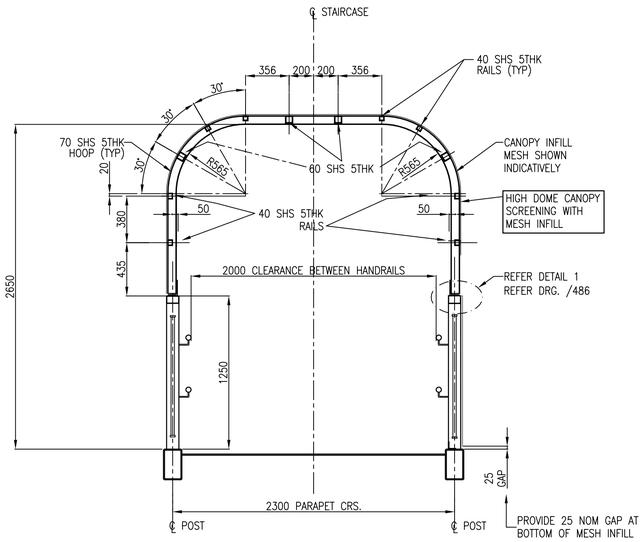

TYPICAL STAIR CANOPY DETAIL

(DETAILS AS TYPICAL SECTION UNLESS OTHERWISE NOTED)
SCALE 1:25

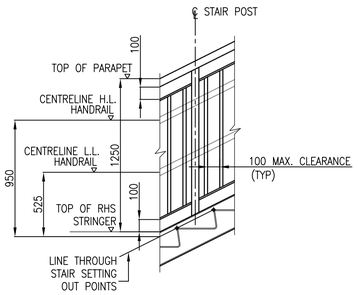

TYPICAL DETAIL ON STAIRS

SCALE 1:25

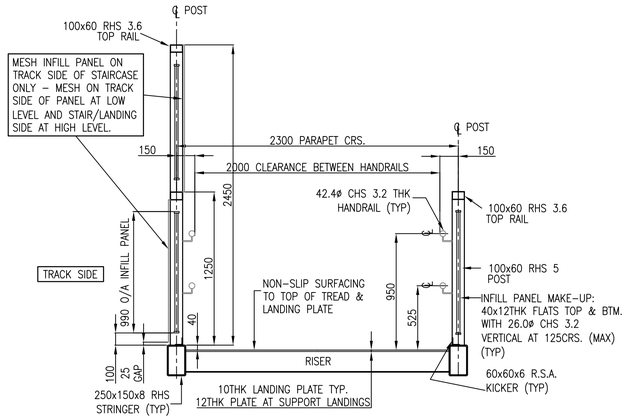

SECTION THRO' STAIR LANDING WITH ANTI-TRESPASS PARTIAL SCREENING

(DETAILS AS TYPICAL SECTION UNLESS OTHERWISE NOTED)
SCALE 1:25

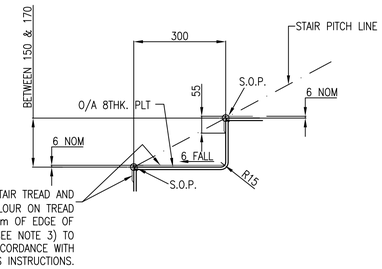

TYPICAL STEP/STAIR OPTIONS

(S.O.P. INTERSECTION OF FACE OF TREAD & RISER)
SCALE 1:10

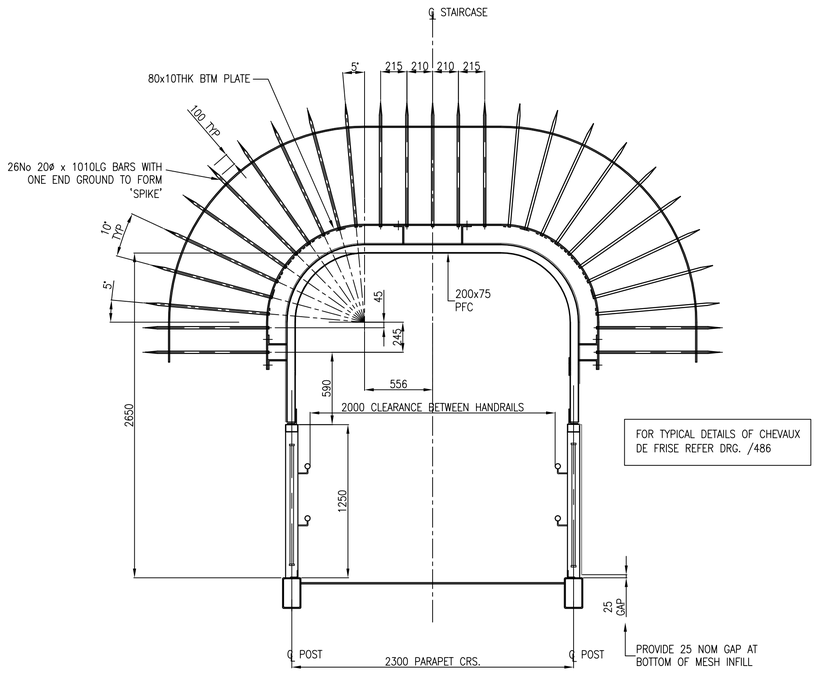

TYPICAL CHEVAUX DE FRISE

(DETAILS AS TYPICAL SECTION UNLESS OTHERWISE NOTED)
SCALE 1:25

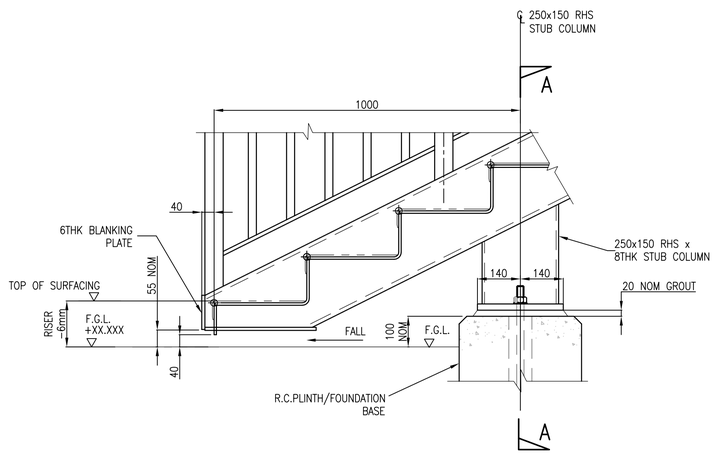

DETAIL AT BOTTOM OF STAIRCASE

SCALE 1:10

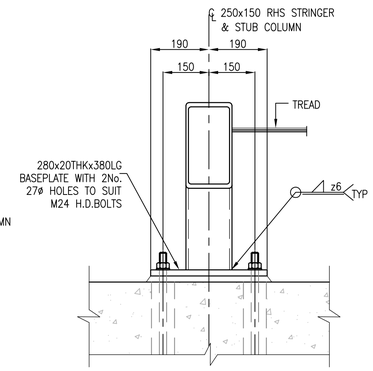

SECTION A–A

SCALE 1:10

NOTES

1. ALL DIMENSIONS IN mm UNLESS NOTED OTHERWISE.
2. THIS DRAWING TO BE READ IN CONJUNCTION WITH ALL NR/CIV/SD/400 SERIES DRAWINGS.
3. THE USE OF MECHANICAL FIXINGS TO SECURE GRP TREADS AND NOSING MAY BE CONSIDERED BY THE DESIGNER SUBJECT TO NETWORK RAIL APPROVAL

Rev	Date	Description of revision	Design'd	C'kd
A	18/4/08	FIRST ISSUE	GPR	NGAY
P4	25/3/08	FORM B APPROVAL	HCHS	NGAY
P3	08/6/07	FORM B APPROVAL	AJB	NGAY
P2	27/4/07	FOR INFORMATION	AJB	NGAY
P1	23/3/06	FORM A APPROVAL	SLB	NGAY

Network Rail
40 Melton Street
London NW1 2EE
Tel: 020-7557-8000

	Name	Position	Signature	Date
Approved	P.CLARK	Senior Prog. Eng. Manager Infrastructure Inv. Construction	PC	04.04.08
Authorised	A.DRAY	Head of Structures Engineering	AD	04.04.08

Master copy with original signatures held by Network Rail HQ
CIVIL ENGINEERING STANDARD DESIGN

© COPYRIGHT NETWORK RAIL 2008

FOOTBRIDGES NON-STATIONS STANDARD DRAWINGS

FOOTBRIDGE ACCESS STRINGER STAIR DETAILS

Scale	AS SHOWN
Drawing Number	NR/CIV/SD/452 A

Full document details: NR NR-CIV-SD-452 ISSUE A 2008
Documents
Document Sharing Hub
Licence-Hexagon Williams(c)2008(1/20). User:sam. sfirst
Copyright Network Rail
Provided by IHS under licence with Network Rail
No reproduction or distribution permitted without licence from IHS