The following information is associated with Network Rail Standard:
NR CIV/SD/455 Rev A

Additional Content Access

Click the link below to access CAD version of this drawing.

CAD Drawing

- CIV/SD/455

If you have any questions, or need assistance, please contact **IHS Support**

Information accessed via the links above is the property of the Copyright holder

IHS Additional Content Page

Documents
Document Sharing Hub

Copyright Network Rail
Provided by IHS under license with Network Rail
No reproduction or networking permitted without license from IHS
Full document details: NR NR-CIV-SD-455 ISSUE A 2008

Licensee=Weston Williamson/5989497001, User=sam, albett
Not for Resale, 03/27/2016 23:53:52 MDT

Full document details: NR NR-CIV-SD-455 ISSUE A 2008

DO NOT SCALE THIS DRAWING

DRAWING No. NR/CIV/SD/455

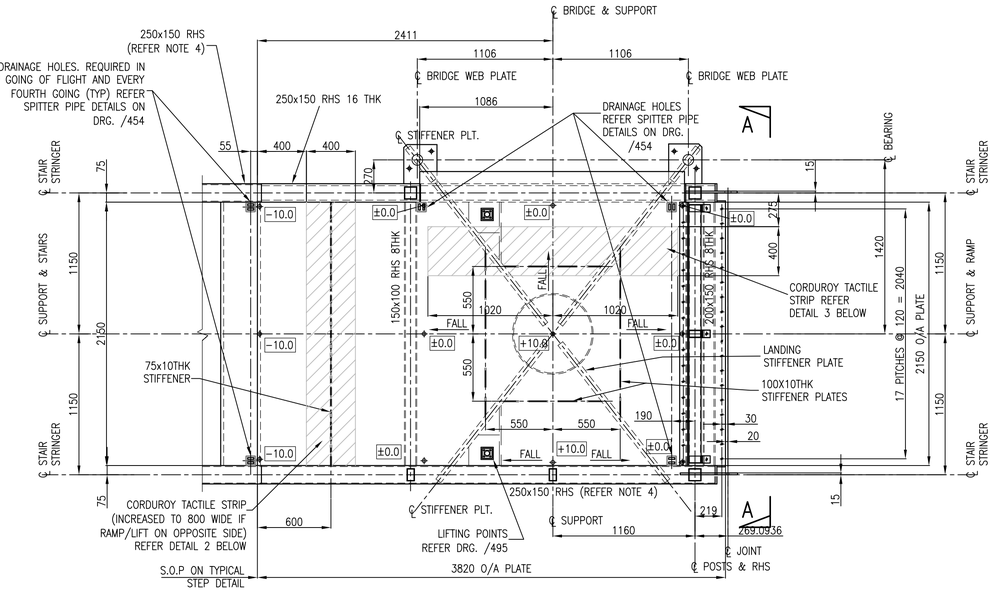

PLAN ON STAIR/OPTION 1 MAIN SPAN LANDING

(REFER DRG. /462 FOR DETAILS OF COLUMN HEAD/CROSS STIFFENER DETAILS AND CONNECTION TO MAIN SPAN DETAILS)
SCALE 1:25

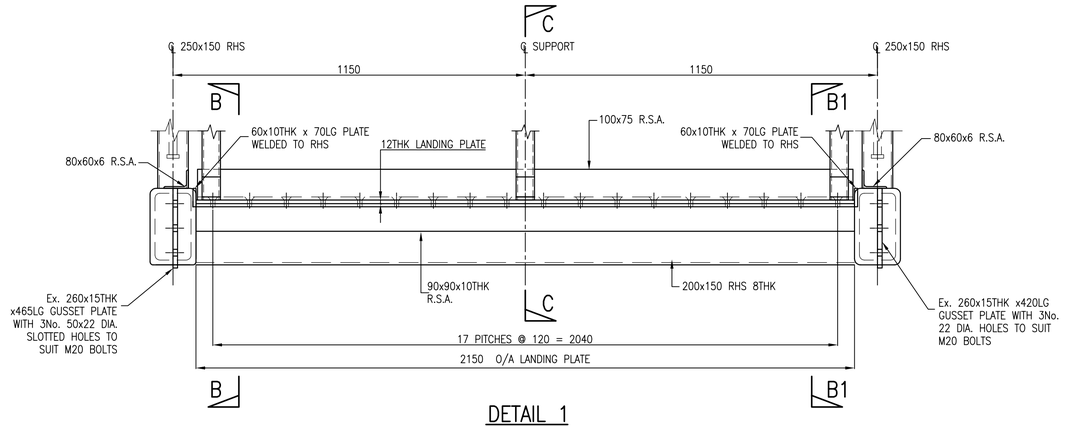

DETAIL 1

(INFILL PANEL/SHS STUB COLUMNS OMITTED FOR CLARITY)
SCALE 1:10

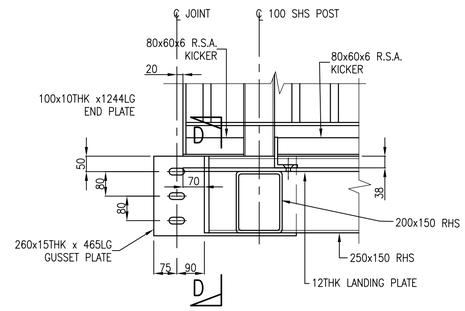

SECTION B–B

SCALE 1:10

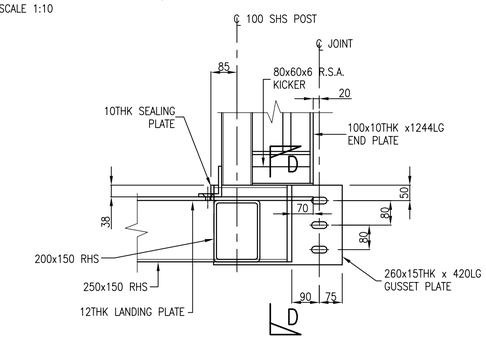

SECTION B1–B1

SCALE 1:10

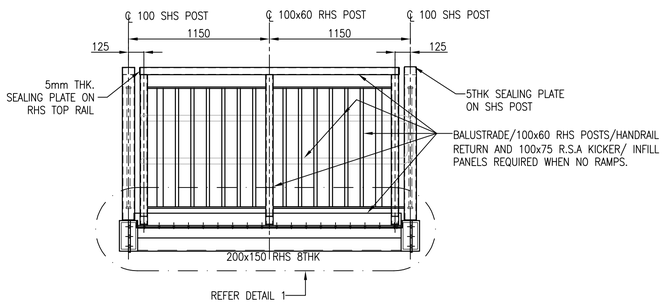

ELEVATION A–A

(CROSS HEAD SUPPORT DETAILS OMITTED FOR CLARITY)
(SCALE 1:25)

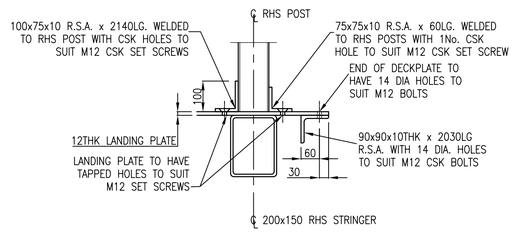

SECTION C–C

SCALE 1:10

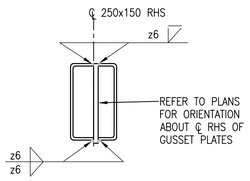

SECTION D–D

(150 SHS OMITTED FOR CLARITY)
SCALE 1:10

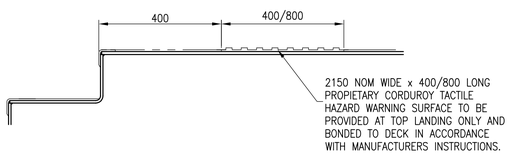

DETAIL 2
DETAIL AT TOP LANDING

SCALE 1:10

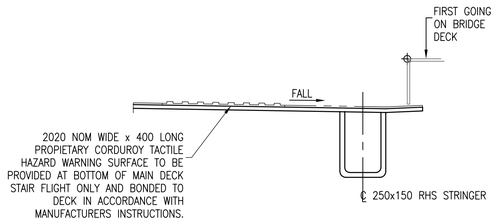

DETAIL 3
DETAIL AT BOTTOM OF STAIR –OPTION 1 MAIN SPAN

SCALE 1:10

NOTES

1. ALL DIMENSIONS IN mm UNLESS NOTED OTHERWISE.
2. THIS DRAWING TO BE READ IN CONJUNCTION WITH ALL NR/CIV/SD/400 SERIES DRAWINGS.
3. POSITION OF LIFTING POINTS IS INDICATIVE ONLY AND EXACT POSITION WILL DEPEND UPON DIMENSIONS OF ATTACHED STAIRS – REFER DRG. /495 FOR LIFING POINT DETAILS. 4 NO. LIFTING POINTS ARE REQUIRED FOR EACH SECTION TO BE LIFTED.
4. THICKNESS OF 250x150 RHS REFERRED TO, TO BE THE SAME AS THE STRINGER THICKNESS OF THE STAIRS USED. REFER DRG/ 451 & 452.

Rev	Date	Description of revision	Design'd	C'kd
A	18/4/08	FIRST ISSUE	GPR	NGAY
P4	25/3/08	FORM B APPROVAL	HCHS	NGAY
P3	08/6/07	FORM B APPROVAL	AJB	NGAY
P2	27/4/07	FOR INFORMATION	AJB	NGAY
P1	–	NOT USED	–	–

Network Rail
40 Melton Street
London NW1 2EE
Tel: 020–7557–8000

Approved	P.CLARK	Senior Prog. Eng. Manager Infrastructure Inv. Construction	PC	04.04.08
Authorised	A.DRAY	Head of Structures Engineering	AD	04.04.08
	Name	Position	Signature	Date

Master copy with original signatures held by Network Rail HQ CIVIL ENGINEERING STANDARD DESIGN

© COPYRIGHT NETWORK RAIL 2008

FOOTBRIDGES NON–STATIONS STANDARD DRAWINGS

FOOTBRIDGE ACCESS CHS MAIN SPAN LANDING OPTION 1 WITH FUTURE RAMP

Scale	AS SHOWN
Drawing Number	NR/CIV/SD/455 A

Documents Document Sharing Hub
Copyright Network Rail
Provided by IHS under licence with Network Rail
Licensee=Wilson,Williams/5935610001, User=sam, allen
2008/04/18 08:00:00 Not for resale
Licence Expires from 1/15