Supplementary Information

The following information is associated with Network Rail Standard:
NR CIV/SD/456 Rev A

Additional Content Access

Click the link below to access CAD version of this drawing.

CAD Drawing

- CIV/SD/456

If you have any questions, or need assistance, please contact **IHS Support**

Information accessed via the links above is the property of the Copyright holder

IHS Additional Content Page

Documents
Document Sharing Hub

Copyright Network Rail
Provided by IHS under license with Network Rail
No reproduction or networking permitted without license from IHS
Full document details: NR NR-CIV-SD-456 ISSUE A 2008

Licensee=Weston Williamson/5989497001, User=sam, albett
Not for Resale, 03/27/2016 23:54:56 MDT

DO NOT SCALE THIS DRAWING

DRAWING No. NR/CIV/SD/456

NOTES

1. ALL DIMENSIONS IN mm UNLESS NOTED OTHERWISE.
2. THIS DRAWING TO BE READ IN CONJUNCTION WITH ALL NR/CIV/SD/400 SERIES DRAWINGS.

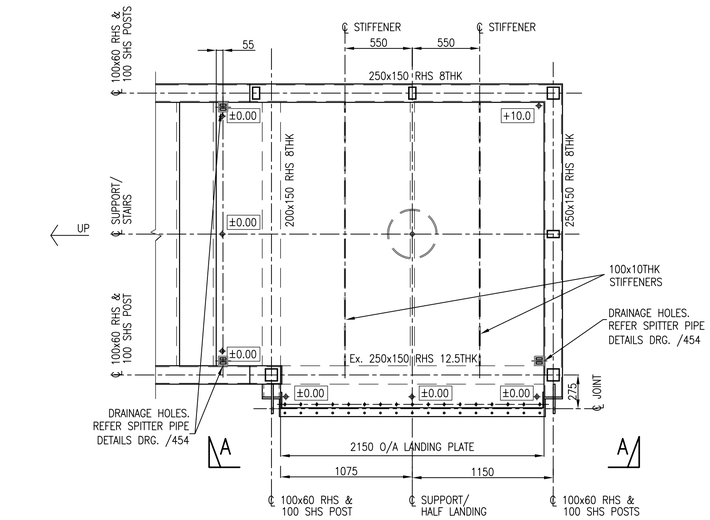

PLAN ON HALF SUPPORT LANDING (UP)

SCALE 1:25

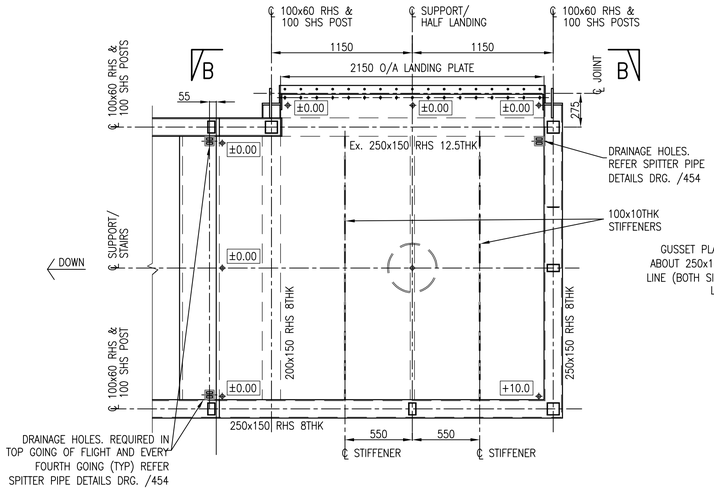

PLAN ON HALF SUPPORT LANDING (DOWN)

SCALE 1:25

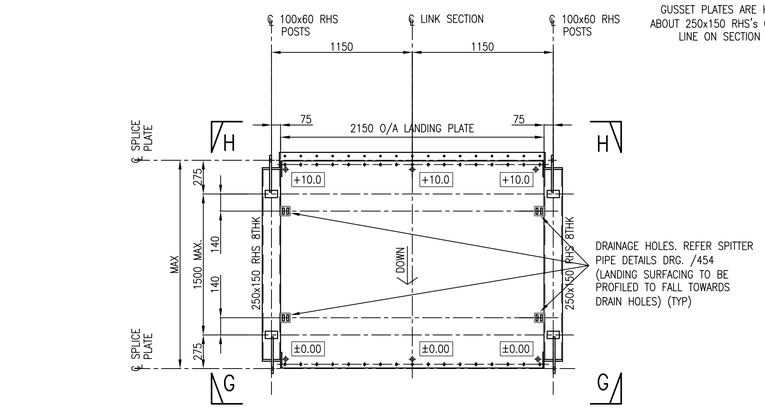

PLAN ON OPTIONAL LINK LANDING

(KICKER ANGLE NOT SHOWN)

SCALE 1:25

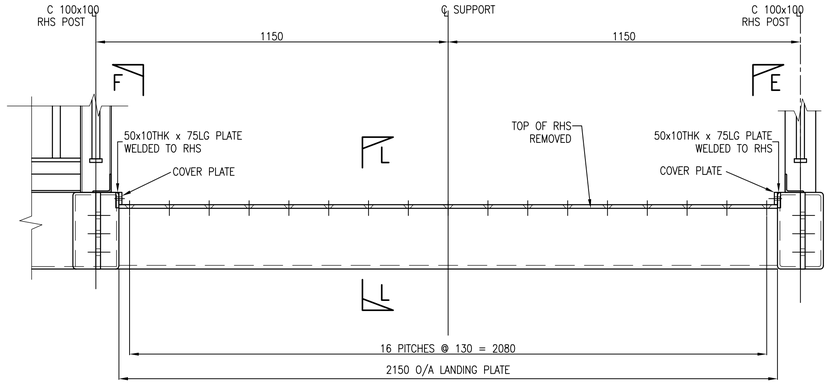

ELEVATION A–A

SCALE 1:10

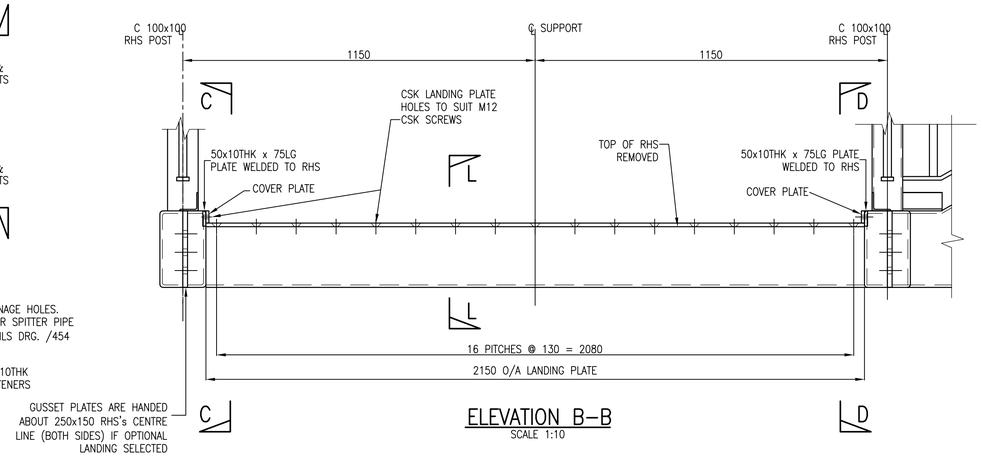

ELEVATION B–B

SCALE 1:10

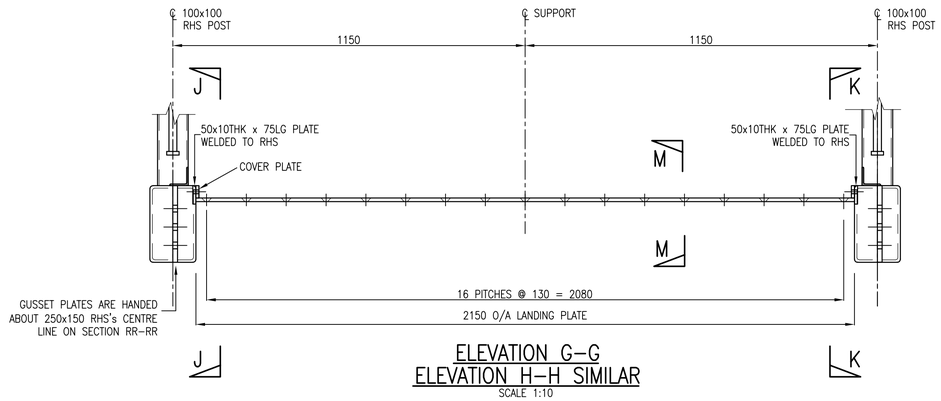

ELEVATION G–G

ELEVATION H–H SIMILAR

SCALE 1:10

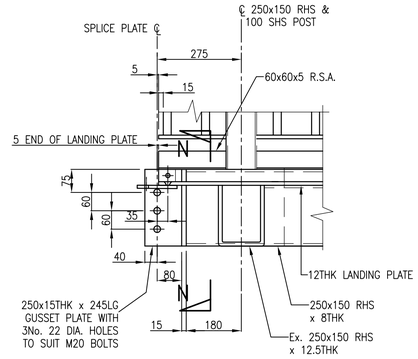

SECTION C–C

SECTION E–E SIMILAR OPP.HAND

(END OF DECK & COVER PLATE OMITTED FOR CLARITY)

SCALE 1:10

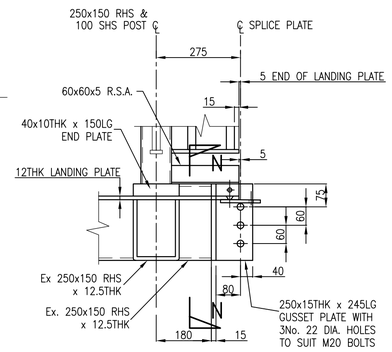

SECTION D–D

SECTION F–F SIMILAR OPP.HAND

(END OF DECK & COVER PLATE OMITTED FOR CLARITY)

N.T.S.

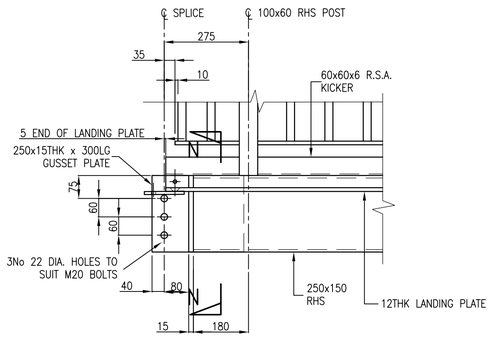

SECTION J–J

SECTION K–K SIMILAR OPP.HAND

(END OF DECK & COVER PLATE OMITTED FOR CLARITY)

N.T.S.

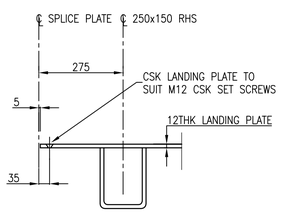

SECTION L–L

SCALE 1:10

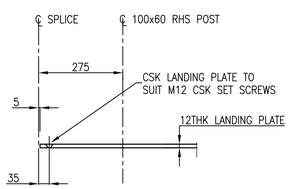

SECTION M–M

SCALE 1:10

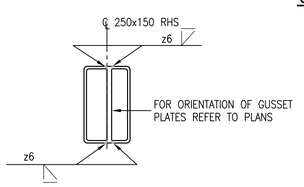

SECTION N–N

SCALE 1:10

Rev	Date	Description of revision	Design'd	C'kd
A	18/4/08	FIRST ISSUE	GPR	NGAY
P4	25/3/08	FORM B APPROVAL	HCHS	NGAY
P3	08/6/07	FORM B APPROVAL	AJB	NGAY
P2	27/4/07	FOR INFORMATION	AJB	NGAY
P1	–	NOT USED	–	–

Network Rail

40 Melton Street
London NW1 2EE

Tel: 020–7557–8000

	Name	Position	Signature	Date
Approved	P.CLARK	Senior Prog. Eng. Manager Infrastructure Inv. Construction	PC	04.04.08
Authorised	A.DRAY	Head of Structures Engineering	AD	04.04.08

Master copy with original signatures held by Network Rail HQ CIVIL ENGINEERING STANDARD DESIGN

© COPYRIGHT NETWORK RAIL 2008

FOOTBRIDGES NON–STATIONS STANDARD DRAWINGS

FOOTBRIDGE ACCESS CHS HALF LANDING DETAILS

Scale	AS SHOWN	
Drawing Number	NR/CIV/SD/456	A

Full document details: NR NR-CIV-SD-456 ISSUE A 2008

Documents Document Share Hub

Copyright Network Rail
Provided by IHS under licence with Network Rail
Licensee=Mapon Willoughby/9999999001, User=sam, allan
No reproduction or networking permitted without licence from IHS