Supplementary Information

The following information is associated with Network Rail Standard:
NR CIV/SD/458 Rev A

Additional Content Access

Click the link below to access CAD version of this drawing.

CAD Drawing

- CIV/SD/458

If you have any questions, or need assistance, please contact **IHS Support**

Information accessed via the links above is the property of the Copyright holder

IHS Additional Content Page

--`,,,`,,`,,`,`,,`,,,,,,`-`-`,,`,,`,`,,`---

Documents
Document Sharing Hub

Copyright Network Rail
Provided by IHS under license with Network Rail
No reproduction or networking permitted without license from IHS
Full document details: NR NR-CIV-SD-458 ISSUE A 2008

Licensee=Weston Williamson/5989497001, User=sam, albett
Not for Resale, 03/27/2016 23:52:29 MDT

DO NOT SCALE THIS DRAWING

DRAWING No. NR/CIV/SD/458

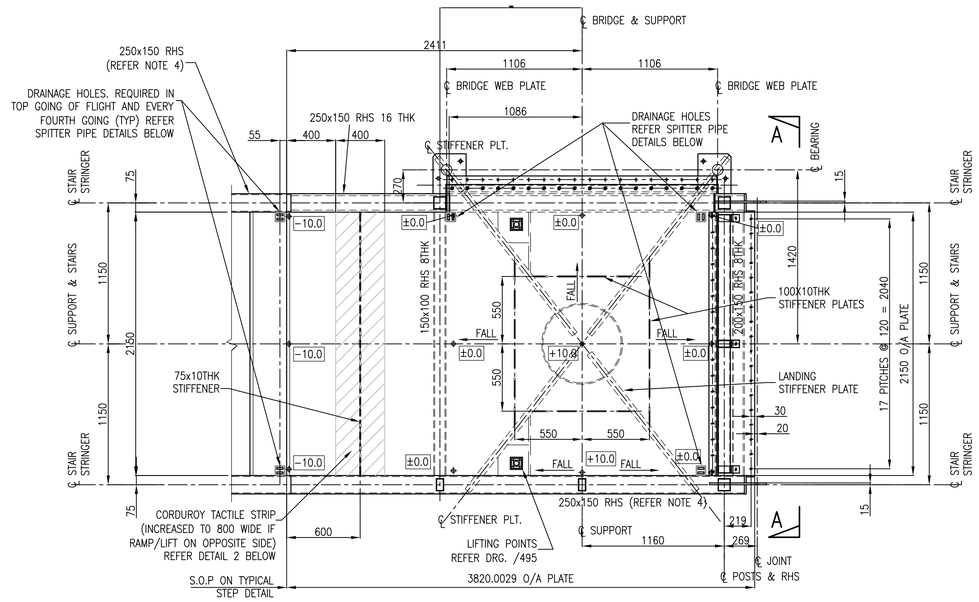

PLAN ON STAIR/OPTION 2 MAIN SPAN LANDING

(DETAILS AS DRG. /457 UNLESS NOTED OTHERWISE)
(REFER DRG. /457 FOR DETAILS OF COLUMN HEAD/CROSS STIFFENER DETAILS AND CONNECTION TO MAIN SPAN DETAILS)
SCALE 1:25

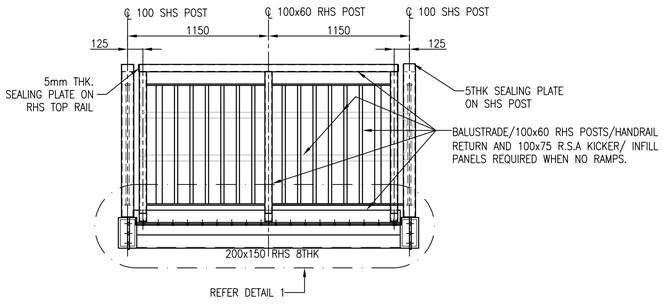

ELEVATION A–A

(CROSS HEAD SUPPORT DETAILS OMITTED FOR CLARITY)
(SCALE 1:25)

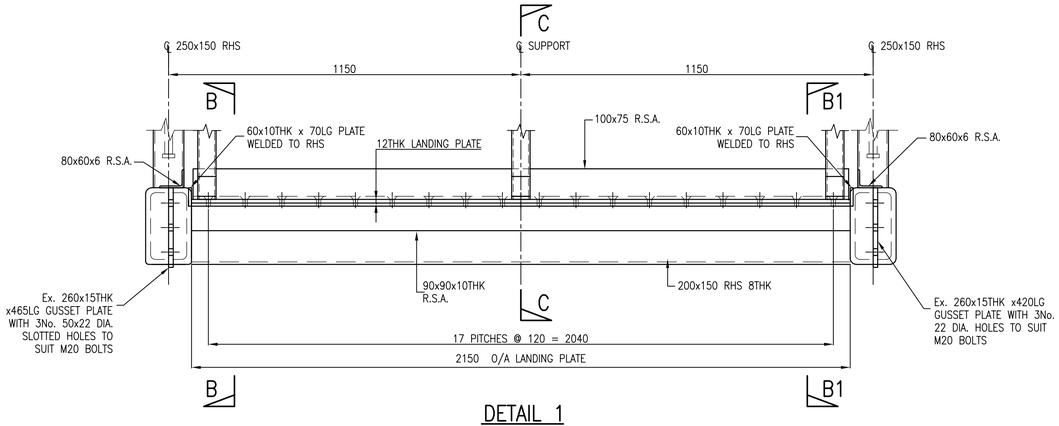

DETAIL 1

(INFILL PANEL/SHS STUB COLUMNS OMITTED FOR CLARITY)
SCALE 1:10

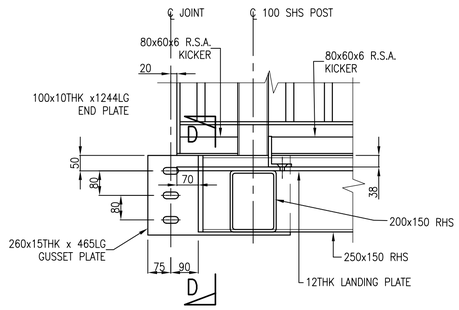

SECTION B–B

SCALE 1:10

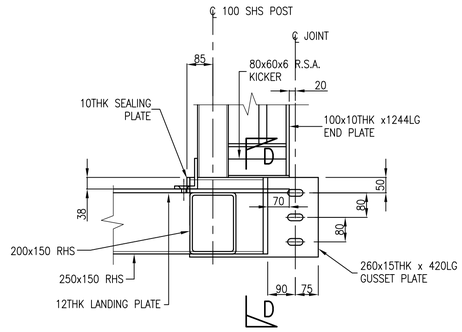

SECTION B1–B1

SCALE 1:10

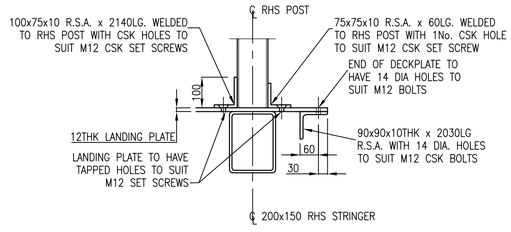

SECTION C–C

SCALE 1:10

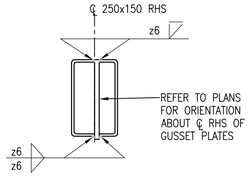

SECTION D–D

(150 SHS OMITTED FOR CLARITY)
SCALE 1:10

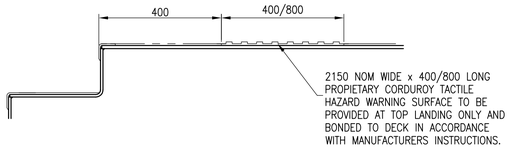

DETAIL 2
DETAIL AT TOP LANDING

SCALE 1:10

NOTES

1. ALL DIMENSIONS IN mm UNLESS NOTED OTHERWISE.
2. THIS DRAWING TO BE READ IN CONJUNCTION WITH ALL NR/CIV/SD/400 SERIES DRAWINGS.
3. POSITION OF LIFTING POINTS IS INDICATIVE ONLY AND EXACT POSITION WILL DEPEND UPON DIMENSIONS OF ATTACHED STAIRS – REFER DRG. /495 FOR LIFING POINT DETAILS. 4 NO. LIFTING POINTS ARE REQUIRED FOR EACH SECTION TO BE LIFTED.
4. THICKNESS OF 250x150 RHS REFERRED TO, TO BE THE SAME AS THE STRINGER THICKNESS OF THE STAIRS USED. REFER DRG/ 451 & 452.

Rev	Date	Description of revision	Design'd	C'kd
A	18/4/08	FIRST ISSUE	GPR	NGAY
P4	25/3/08	FORM B APPROVAL	HCHS	NGAY
P3	08/6/07	FORM B APPROVAL	AJB	NGAY
P2	27/4/07	FOR INFORMATION	AJB	NGAY
P1	–	NOT USED	–	–

Network Rail
40 Melton Street
London NW1 2EE
Tel: 020–7557–8000

	Name	Position	Signature	Date
Approved	P.CLARK	Senior Prog. Eng. Manager Infrastructure Inv. Construction	PC	04.04.08
Authorised	A.DRAY	Head of Structures Engineering	AD	04.04.08

Master copy with original signatures held by Network Rail HQ CIVIL ENGINEERING STANDARD DESIGN

© COPYRIGHT NETWORK RAIL 2008

FOOTBRIDGES NON–STATIONS STANDARD DRAWINGS

FOOTBRIDGE ACCESS CHS MAIN SPAN LANDING OPTION 2 WITH FUTURE RAMP

Scale	AS SHOWN
Drawing Number	NR/CIV/SD/458 A

Full document details: NR NR-CIV-SD-458 ISSUE A 2008
Documents Document Sharing Hub
Copyright Network Rail
Provided by IHS under licence with Network Rail
Licensee=Halcrow Willbroad/5935941001, User=sam, allnet
Not for resale, Date of download 17-Nov-2008 Licence from IHS